ENG
Operator's Manual

SLIT LAMP MICROSCOPE HS-7500

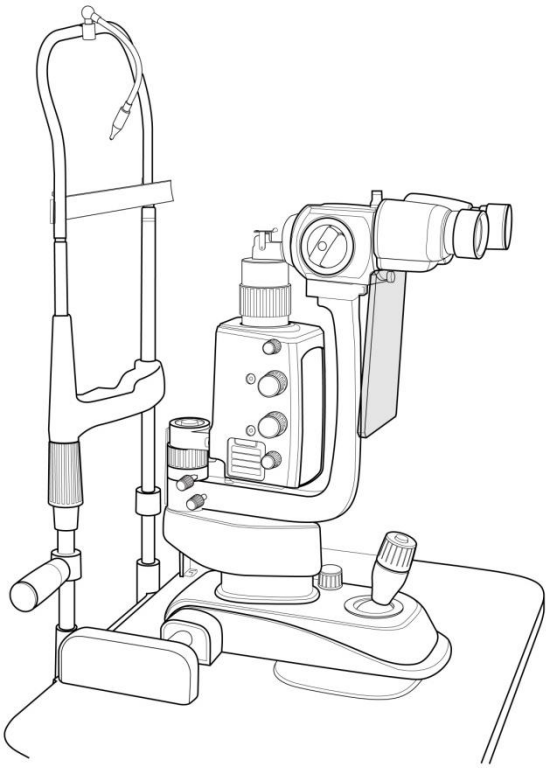

Huvitz
Pacing Progress toward People

IMPORTANT NOTICE

⚠ WARNING

Potential electromagnetic or other interference between medical equipments and other devices being operated together in the same environmental may expert an adverse influence on functioning of the medical equipment. Non-medical equipments not in compliance with the requirements of EN 60601-1 and EN 60601-1-2 should not be used together in the same environmental as the medical equipments

Des interférences électromagnétiques ou autres potentielles entre des équipements médicaux et d'autres appareils fonctionnant ensemble dans le même environnement peuvent entraîner une influence défavorable sur le fonctionnement de l'équipement médical. Les équipements non médicaux non conformes aux exigences des normes EN 60601-1 et EN 60601-1-2 ne doivent pas être utilisés ensemble dans le même environnement que les équipements médicaux.

This equipment has been tested and found to comply with the limits for medical devices in IEC 60601-1-2. These limits are designed to provide reasonable protection against harmful interference in a typical medical installation

Power Cord

For use of equipment in rated voltage less than 125Vac,minimum 6A,Type SJT or SVT , 18/3AWG,10A, max 3.0m long : One end with Hospital Grade Type, NEMA 5-15P Other end with appliance coupler. For use of equipment in rated voltage less than 250Vac,minimum 6A,Type SJT or SVT , 18/3AWG,10A, max 3.0m long : One end terminatesd with blade attachment plug(HAR) Type, NEMA 6-15P.

This product may malfunction due to electromagnetic waves caused by portable personal telephones, transceivers, radio-controlled toys, etc. Be sure to avoid having objects such as, which affect this product, brought near the product.

The information in this publication has been carefully checked and is believed to be entirely accurate at the time of publication. HUVITZ assumes no responsibility, however, for possible errors or omissions, or for any consequences resulting from the use of the information contained herein.

HUVITZ reserves the right to make changes in its products or product specifications at any time and without prior notice, and is not required to update this documentation to reflect such changes.

9000ENGJ301-J
(2026.10)
ANVISA : 81325990375

©2009 HUVITZ Co., Ltd.
38, Burim-ro 170beon-gil, Dongan-gu, Anyang-si, Gyeonggi-do, 14055, Republic of Korea

All rights are reserved.
Under copyright laws, this manual may not be copied, in whole or in part, without the prior written consent of HUVITZ Co., Ltd.

Contents

1. Introduction....6

1.1. Indication for use....6

1.2. Classification....6

2. Safety Information....7

2.1. Introduction....7

2.2. Safety Symbols....8

2.3. Environment factors....13

2.4. Safety Precautions....15

3. Features & Operating Condition....20

3.1. Brief Description....20

3.2. Operating Condition....20

4. Standard Components....23

5. Accessories....24

6. Composition....25

7. Installation....31

7.1. Assembling the Instrument....31

8. Trial Operations....35

9. Main Features....36

10. Ordinary Maintenance....37

10.1. Halogen Projection bulb or LED lamp 38

10.2. Protection fuses replacement..... 40

10.3. Cleaning & Disinfection..... 41

10.4. Disposal 41

11. EMC Information..... 42

12. Electric Diagram 44

13. Technical Specifications 45

14. Service Information 47

1. Introduction

1.1. Indication for use(intended use)

The SLIT LAMP, HS-7500 is intended for use in eye examination of the anterior eye segments, from the cornea epithelium to the posterior capsule. It is used to aid in the diagnosis of diseases or trauma which affect the structural properties of the anterior eye segment.

1.2. Classification

- Protection against electric shock: Class I
- Applied Parts: Type B applied parts.
- Protection against harmful ingress of water: Ordinary, IPX0
- Degree of safety in the presence of a flammable anesthetics mixture with air or with oxygen or with nitrous oxide: Not suitable for use in the presence of a flammable anesthetics mixture with air or with oxygen or with nitrous oxide.
- Mode of operation: Continuous
- Light Hazard protection Classification: Group 1 by ISO15004-2:2007
- Stationary: Do not try to move this equipment without help. This microscope is heavy and should maintain stationary. Always get two persons to help lift this unit
- Classification of product: Class I according to the MDR(EU/2017/745)

⚠ CAUTION

Federal law restricts this device to sale by or on the order of a physician

2. Safety Information

2.1. Introduction

Safety is everyone's responsibility. The safe use of this equipment is largely dependent upon the installer, user, operator, and maintainer. It is imperative that personnel study and become familiar with this entire manual before attempting to install, use, clean, service or adjust this equipment and any associated accessories. It is paramount that the instructions contained in this manual are fully understood and followed to enhance safety to the patient and the user/operator. It is for this reason that the following safety notices have been placed appropriately within the text of this manual to highlight safety related information or information requiring special emphasis. All users, operators, and maintainers must be familiar with and pay particular attention to all Warnings and Cautions incorporated herein.

⚠ WARNING

"Warning" indicates the presence of a hazard that could result in severe personal injury, death or substantial property damage if ignored.

«Warning» indique la présence d'un danger qui pourrait entraîner des blessures graves, la mort ou des dommages matériels importants si ignoré.

NOTE

"Note" describes information for the installation, operation, or maintenance of which is important but hazard related if ignored.

«Note» décrit les informations pour l'installation, le fonctionnement ou la maintenance qui sont importantes mais liées aux dangers si elles sont ignorées.

⚠ CAUTION

"Caution" indicates the presence of a hazard that could result in minor injury, or property damaged if ignored.

«Caution» indique la présence d'un danger pouvant entraîner des blessures légères ou des dommages matériels en cas d'ignorance.

2.2. Safety Symbols

The International Electrotechnical Commission (IEC) has established a set of symbols for medical electronic equipment which classify a connection or warn of any potential hazards. The classifications and symbols are shown below.
This applies only to the instrument that has the certification symbol printed explicitly on the product label or sticker.

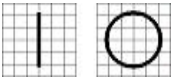	I and O on power switch represent ON and OFF respectively. (O sur l'interrupteur d'alimentation représentent respectivement ON et OFF.)
	Type B Isolated patient connection. (Type B Connexion patient isolée.)
	This symbol identifies a safety note. Ensure you understand the function of this control before using it. Control function is described in the appropriate User's or Service Manual. (Ce symbole identifie une note de sécurité. Assurez-vous de comprendre la fonction de ce contrôle avant de l'utiliser. La fonction de contrôle est décrite dans le manuel d'utilisation ou d'entretien approprié.)

	It indicates the year of manufacture and the manufacturer. (Il indique l'année de fabrication et le fabricant.)
	Manufacturer (Fabricant)
	Authorized representative in the European Community – EU ONLY (Représentant autorisé dans la Communauté européenne-EU seulement)
	Identifies the point where the system safety ground is fastened to the chassis. Protective earth connected to conductive parts of Class I equipment for safety purposes. (Identifie le point où la terre de sécurité du système est fixée au châssis. Terre de protection connectée aux parties conductrices des équipements de classe I à des fins de sécurité.)
	Alternating Current (Courant alternative)
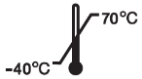	Temperature Limitation (Limitation de température)
	Keep DRY (Garder au sec)

CLASSIFIED C UL US E355544 MEDICAL – GENERAL EQUIPMENT AS TO ELECTRICAL SHOCK, FIRE AND MECHANICAL HAZARDS ONLY IN ACCORDANCE WITH ANSI/AAMI ES60601–1:2005/A2:2021 CAN/CSA–C22.2 No. 60601–1 (Amendment 2:2022)	The United States and Canada have mutual-recognition agreements. Therefore, if certified using a Canadian specification (CSA) for UL, the certification mark for the product will be a C-UL certification mark which means CSA specification compliance as follows. (Les États-Unis et le Canada ont conclu des accords d libre-échange. Par conséquent, si l'on obtient une certification au moyen d'une spécification canadienne (CSA) pour l'AMT, la marque de certification pour le roduit sera une marque de certification C-UL, ce qui signifie la conformité de la spécification CSA comme suit.)
	WEEE mark Disposal of your old appliance When this crossed-out wheeled bin symbol is attached to a product it means the product is covered by the European Directive 2002/96/EC. All electrical and electronic products should be disposed of separately from the municipal waste stream via designated collection facilities appointed by the government or the local authorities. The correct disposal of your old appliance will help prevent potential negative consequences for the environment and human health. For more detailed information about disposal of your old appliance, please contact your city office, waste disposal service or the shop where you purchased the product. (Mise au rebut de votre ancien appareil Lorsque ce symbole de poubelle barrée est joint à un produit, cela signifie que le produit est couvert par la directive européenne 2002/96 / CE. Tous les produits électriques et électroniques doivent être éliminés séparément du flux des déchets municipaux via des installations de collecte désignées par le gouvernement ou les autorités locales. L'élimination correcte de votre ancien appareil aidera à prévenir les conséquences négatives potentielles sur l'environnement et la santé humaine. Pour plus d'informations sur l'élimination de votre ancien appareil, veuillez contacter votre mairie, le service d'élimination des déchets ou le magasin où vous avez acheté le produit.)

CE	CE Mark (Marque CE)
CE RoHS	CE for RoHS RoHS Directive Compliance 2011/65/EU (CE pour RoHS Conformité à la directive RoHS 2011/65 / UE)
	Atmospheric pressure limitation (Limitation de pression atmosphérique)
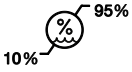	Humidity limitation (Limite d'humidité)
	Stack direction (Direction de la pile)
	Fragile , handle with care (Fragile, manipuler avec soin)
	Keep away from sunlight (Tenir à l'écart de la lumière du soleil)
	Stack layer limitation (Limiter la couche de pile)

	Use no hooks (N'utilisez aucun crochet)
	Consult instructions for use (Consulter les instructions d'utilisation)
	Serial Number Symbol (Symbole du numéro de série)
	Needed doctor's prescription (Nécessité d'une ordonnance médicale)

2.3. Environment factors

Avoid the following environments for operation or storage:

	Where the instrument is exposed to water vapor. Don't operate the instrument with wet hands Indoor use only.
	Where the instrument is exposed to direct sunlight.
s 	A place where the equipment can be exposed to direct ultraviolet.
	Where there are big changes in temperature. Optimal temperature range for normal operation is from 10°C to 40°C (Humidity : 30 ~ 90%).
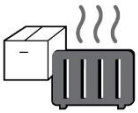	Where there is hot equipment nearby.

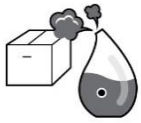

Where the humidity is extremely high or there is a ventilation problem.

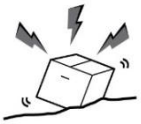

Where the instrument is exposed to excessive shocks or vibrations.



Where the instrument is exposed to chemical material or explosive gas.



Be cautious so that things like dust and metal do not fall inside the instrument.

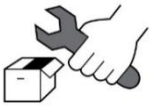

Don’t disassemble or open the product. HUVITZ does not take responsibility for the possible problems



Be careful not to block the fan of the instrument.

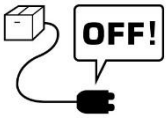

Don’t plug the AC power cable into the outlet unless all parts of the instrument are completely connected. Otherwise, it will cause severe damage on the instrument.



Pull out the power cable with holding the plug, not the cord.

To avoid risk of electric shock, this equipment must only be connected to a supply mains with protective earth.

2.4. Safety Precautions(Précautions de sécurité)

This equipment has been developed and tested according to safety standards as well as national and international standards. This guarantees a very high degree of safety for this device. The legislator expects us to inform the user expressively about the safety aspects in dealing with the device. The correct handling of this equipment is imperative for its safe operation. Therefore, please read carefully all instructions before switching on this device. For more detailed information, please contact our Customer Service Department or one of our authorized representatives.

Cet équipement a été développé et testé selon les normes de sécurité ainsi que les normes nationales et internationales. Cela garantit un très haut degré de sécurité pour cet appareil. Le législateur attend de nous que nous informions expressément l'utilisateur des aspects de sécurité liés à l'utilisation de l'appareil. La manipulation correcte de cet équipement est impérative pour son fonctionnement en toute sécurité. Par conséquent, veuillez lire attentivement toutes les instructions avant d'allumer cet appareil. Pour plus d'informations, veuillez contacter notre service client ou l'un de nos représentants autorisés.

1. This equipment must not be used (a) in an area that is in danger of explosions and (b) in the presence of flammable, explosive, or volatile solvent such as alcohol, benzene or similar chemicals.

   Cet équipement ne doit pas être utilisé (a) dans une zone à risque d'explosion et (b) en présence de solvants inflammables, explosifs ou volatils tels que l'alcool, le benzène ou des produits chimiques similaires.

2. Do not put or use this device in humid rooms. Humidity should be maintained between 30% and 90% for normal operation. Do not expose the device to water splashes, dripping water, or sprayed water. Do not place containers containing fluids, liquids, or gases on top of any electrical equipment or devices.

   Ne placez pas et n'utilisez pas cet appareil dans des pièces humides. L'humidité doit être maintenue entre 30% et 90% pour un fonctionnement normal. N'exposez pas l'appareil aux éclaboussures d'eau, aux gouttes d'eau ou à l'eau pulvérisée. Ne placez pas de récipients contenant des fluides, des liquides ou des gaz sur des équipements ou appareils électriques.

3. The equipment must be operated only by, or under direct supervision of a properly trained and qualified person.

   L'équipement ne doit être utilisé que par ou sous la supervision directe d'une personne correctement formée et qualifiée.

4. Modifications of this equipment may only be carried out by Huvitz's service technicians or other authorized persons.

   Les modifications de cet équipement ne peuvent être effectuées que par les techniciens de maintenance Huvitz ou d'autres personnes autorisées.

5. Customer maintenance of this equipment may only be performed as stated in the User's Manual and Service Manual. Any additional maintenance may only be performed by Huvitz's service technicians or other authorized persons.

   La maintenance par le client de cet équipement ne peut être effectuée que comme indiqué dans le manuel de l'utilisateur et le manuel de service. Toute maintenance supplémentaire ne peut être effectuée que par les techniciens de maintenance Huvitz ou d'autres personnes autorisées.

6. The manufacturer is only responsible for effects on safety, reliability, and performance of this equipment when the following requirements are fulfilled: (1) The electrical installation in the respective room corresponds to the specifications stated in this manual and (2) This equipment is used, operated, and maintained according to this manual and Service Manual.
   Le fabricant est uniquement responsable des effets sur la sécurité, la fiabilité et les performances de cet équipement lorsque les exigences suivantes sont remplies: (1) L'installation électrique dans la pièce respective correspond aux spécifications indiquées dans ce manuel et (2) Cet équipement est utilisé, exploité, et entretenu conformément à ce manuel et au manuel d'entretien.

7. The manufacturer is not liable for damage caused by unauthorized tampering with the device(s). Such tampering will forfeit any rights to claim under warranty.

   Le fabricant n'est pas responsable des dommages causés par une altération non autorisée du ou des appareils. Une telle altération perdra tout droit de réclamation sous garantie.

8. This equipment may only be used together with accessories supplied by Huvitz's. If the customer makes use of other accessories, use them only if their safe usability under technical safety aspects has been proved and confirmed by Huvitz or the manufacturer of the accessory.

   Cet équipement ne peut être utilisé qu'avec les accessoires fournis par Huvitz. Si le client utilise d'autres accessoires, utilisez-les uniquement si leur utilisation sûre sous des aspects techniques de sécurité a été prouvée et confirmée par Huvitz ou le fabricant de l'accessoire.

9. Only persons who have undergone proper training and instructions are authorized to install, use, operate, and maintain this equipment.

   Seules les personnes ayant suivi une formation et des instructions appropriées sont autorisées à installer, utiliser, faire fonctionner et entretenir cet équipement.

10. Keep the User's Manual and Service Manual in a place easily accessible at all times for persons operating and maintaining the equipment.

    Conservez le manuel de l'utilisateur et le manuel d'entretien dans un endroit facilement accessible à tout moment pour les personnes qui utilisent et entretiennent l'équipement.

11. Do not force cable connections. If a cable does not connect easily, be sure that the connector (plug) is appropriate for the receptacle (socket). If you cause any damage to a cable connector(s) or receptacle(s), let the damage(s) be repaired by an authorized service technician.

    Ne forcez pas les connexions des câbles. Si un câble ne se connecte pas facilement, assurez-vous que le connecteur (fiche) est approprié pour la prise (prise). Si vous endommagez un ou plusieurs connecteurs de câble ou prise de courant, faites réparer les dommages par un technicien de maintenance agréé.

12. Please do not pull on any cable. Always hold on to the plug when disconnecting cables.

    Veuillez ne tirer sur aucun câble. Tenez toujours la fiche lorsque vous débranchez les câbles.

13. Before every operation, visually check the equipment for exterior mechanical damage(s) and for proper function.

    Avant chaque opération, vérifiez visuellement l'équipement pour détecter tout dommage mécanique extérieur et son bon fonctionnement.

14. Do not cover any ventilation grids or slits.
Ne recouvrez aucune grille ou fente de ventilation.

Éteignez et débranchez immédiatement tout équipement qui dégage de la fumée, des étincelles, des bruits étranges ou des odeurs.

15. Immediately turn off and unplug any equipment that gives off smoke, sparks, strange noises, or odors.

Éteignez et débranchez immédiatement tout équipement qui dégage de la fumée, des étincelles, des bruits étranges ou des odeurs.

16. Power Supply Cord set (international) - (Detachable) Rated 10 A, 250 V. Plug type CEE 7/VII, Connector type IEC 60320/C13, and Cord type H05VV-F3G, min. 0.75 mm2, 3-conductor terminating in molded-on grounding type attachment plug. <HAR> marked on the cord. Maximum 4.0 m long.

Jeu de cordons d'alimentation (international) - (détachable) nominal 10 A, 250 V. Type de fiche CEE 7 / VII, type de connecteur IEC 60320 / C13 et type de cordon H05VV-F3G, min. 0,75 mm2, 3 conducteurs se terminant par une fiche de fixation moulée sur terre. <HAR> marqué sur le cordon. 4,0 m de long maximum.

3. Features & Operating Condition

3.1. Brief Description

The device works like all slit lamps:

- stereomicroscopic examination of the eye under the slit light.
- microscopic examination of the ocular fundus and posterior vitreous body (using hubry's lens).

These devices are designed for use by ophthalmologists and optometrists(within the realms of their respective professions) for specific diagnostic procedures(bio-microscopic examination of the eye)

3.2. Operating Condition

This instrument must be followed by these following conditions:

-. Operation
An ambient temperature range of 10℃ ~ 40℃ (50°F ~ 104°F)
A relative humidity range of 30% ~ 90%(with non-condensing)
An atmospheric pressure range of 800 ~ 1060hpa
An indoor use, Altitude up to 2000 m

-. Transportation(with packaging)
An ambient temperature range of -40℃ ~ 70℃ (-40°F ~ 158°F)
A relative humidity range of 10% ~ 95%
An atmospheric pressure range of 500 ~ 1060hpa

-. Storage
An ambient temperature range of -10℃ ~ 55℃ (14°F ~ 131°F)
A relative humidity range of 10% ~ 95% (with non-condensing)
An atmospheric pressure range of 700 ~ 1060hpa

Please avoid where the equipment is exposed to excessive shocks or vibration.

⚠ CAUTION

Because prolonged intense light exposure can damage the retina, the use of the device for ocular examination should not be unnecessarily prolonged, and the brightness setting should not exceed what is needed to provide clear visualization of the target structures. This device should be used with filters that eliminate UV radiation(<400nm)and, whenever possible, filters that eliminate short-wavelength blue light(<420nm).

The retinal exposure dose for a photochemical hazard is a product of the radiance and the exposure time. If the value of radiance were reduced in half, twice the time would be needed to reach the maximum exposure limit.

While no acute optical radiation hazards have been identified for slit lamps, it is recommended that the intensity of light directed into the patient's eye be limited to the minimum level which is necessary for diagnosis. Infants, aphakes and persons with diseased eyes will be at greater risk. The risk may also increased of the person being examined has had any exposure with the same instrument or any other ophthalmic instrument using a visible light source during the previous 24 hours. This will apply particularly if the eye has been exposed to retinal photography

Étant donné qu'une exposition intense et prolongée à la lumière peut endommager la rétine, l'utilisation de l'appareil pour l'examen oculaire ne doit pas être prolongée inutilement et le réglage de la luminosité ne doit pas dépasser ce qui est nécessaire pour fournir une visualisation claire des structures cibles. Cet appareil doit être utilisé avec des filtres qui éliminent le rayonnement UV (<400 nm) et, dans la mesure du possible, des filtres qui éliminent la lumière

bleue à courte longueur d'onde (<420 nm).

La dose d'exposition rétinienne pour un danger photochimique est un produit de l'éclat et du temps d'exposition. Si la valeur de l'éclat était réduite de moitié, il faudrait deux fois plus de temps pour atteindre la limite d'exposition maximale.

Bien qu'aucun risque de rayonnement optique aigu n'ait été identifié pour les lampes à fente, il est recommandé de limiter l'intensité de la lumière dirigée dans l'œil du patient au niveau minimum nécessaire au diagnostic. Les nourrissons, les aphakes et les personnes ayant des yeux malades seront plus à risque. Le risque peut également augmenter si la personne examinée a été exposée au même instrument ou à tout autre instrument ophtalmique utilisant une source de lumière visible au cours des dernières 24 heures. Cela s'appliquera en particulier si l'œil a été exposé à la photographie rétinienne

4. Standard Components

The instrument is delivered in package. Taking it out of the package, make sure that none of the following parts is missing.

- A table top(11)(N.B. the table top isn't supplied with the slit lamp for twin table) on which are placed: A SMPS box(15) including the main switch & a warning light (13), Two sliding guides for the base with orthogonal movements(17), A sliding plate for the position device(19), A drawer(16);

  If Unit Table (61) is selected as an option, a metal table will be provided instead of the standard top plate (11).

- A base with orthogonal movements.

- A microscope with either dual magnification or a system(31) including eyepieces.

- An optical group of the slit projector.

- A head rest module(59).

- A microscope arm(45).

- This manual.

- A set of accessories including; two wheels for the sliding guides(18); a setting rod(43); a protective cover(46); a spare bulb 12V 30W Halogen bulb(53) – Except LED model; two protection fuses(48); a breath screen(5); a chin-rest paper(47);a hole cover(45); a power cable; two patient's handles(50)

5. Accessories

The following standard accessories are provided with the instrument;

- protection cover(46)
- a setting rod(43)
- spare bulbs
  12V 30W Halogen bulb(53) – Except LED model
- chin-rest paper(47)
- spare fuses 250Vac T2.0AL
- a breath screen(5)
- power cable

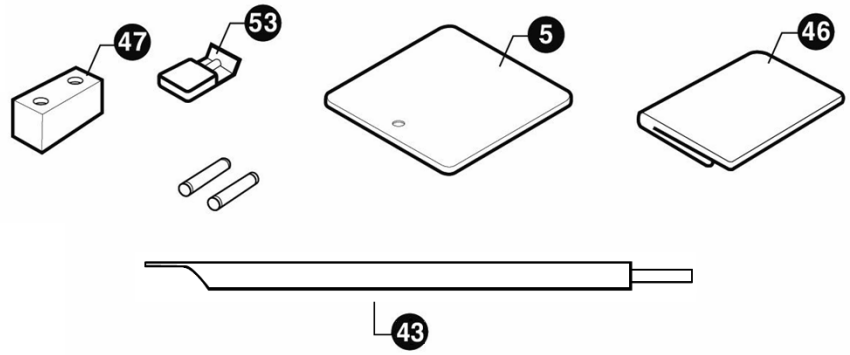

[Figure 1. Accessories]

6. Composition

1) Fixation point
2) Control lever for changing enlargement
3) Removable eye-pieces
4) Knob for clamping the breath screen
5) Breath screen
6) Knobs to change the slit length
7) Connecting plug of the projector lamp
8) Knurled ring for filters insertion
9) Joystick for lateral, longitudinal and vertical movements(x y z)
10) Base with orthogonal movements
11) Shaped tabletop
12) Warning light indicating the ignition of the SMPS is on
13) Main switch & Warning light
14) Luminosity selector
15) SMPS box
16) Drawer
17) Toothed guides
18) Wheel protection crankcases
19) Sliding plate
20) Knob to lock the projector
21) Scale for the projector position
22) Knob to lock the arm of the microscope
23) Hole cover
24) Cover holder screw
25) Control handle for the vertical setting of the chin-rest
26) Locking pins for chin rest paper

27) Chin rest
28) Knobs to change the slit width
29) Pointer for the eye positioning
30) Forehead Rest
31) Microscope
32) Lamp socket
33) Knob to lock the base of the instrument
34) Knob to lock the microscope
35) Control handle for horizontal tilting
36) Control handle for vertical tilting
37) Microscope position stop
38) Knobs to change the slit rotation 90-0-90
39) Lamp cover
40) fuse slots
41) Connecting plug
42) Fixation point connector
43) Setting rod
44) Microscope separation knob
45) Microscope arm
46) Protection cover
47) Chin rest papers
48) Guide screw
49) An optical group of the slit projector (Halogen or LED)
50) Patient's handle
51) Head rest fastening screw
52) Wheel
53) Halogen bulb 12V 30W

54) Bulb fastening knob
55) Prism
56) Capture connector (For the image system)
    Or Rubber cap (No image system)
57) Capture switch
58) Luminosity selector connector (Connect the Luminosity selector to the SMPS)
59) Head rest module
60) Diffuser
61) Unit table (Option)

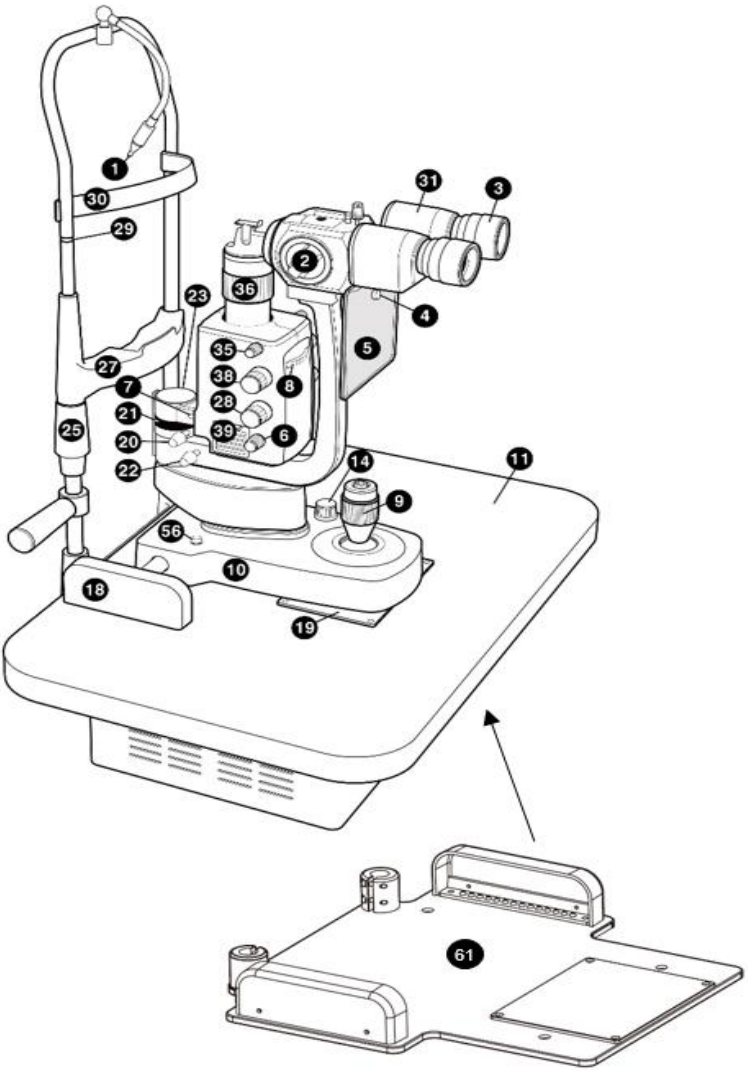

[Figure 2. Composition I]

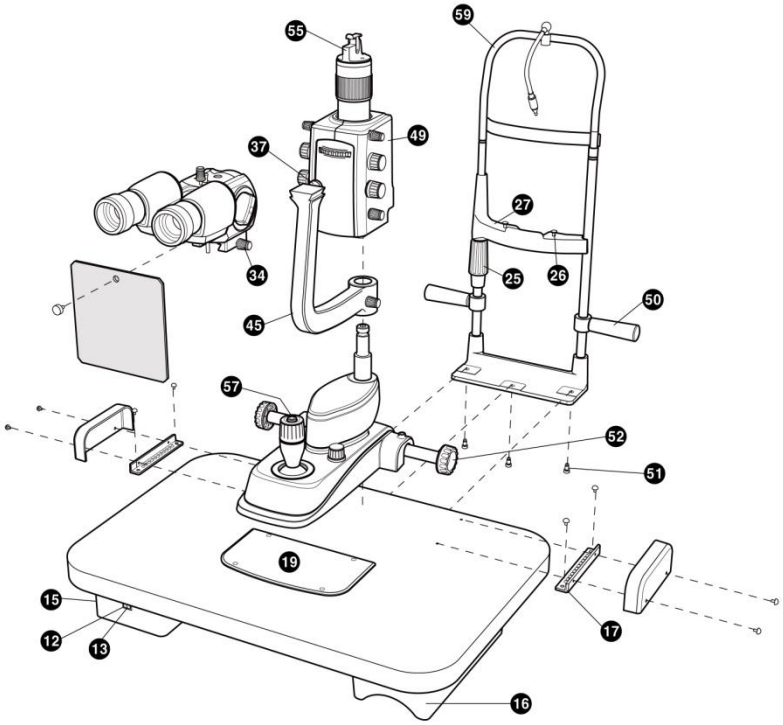

[Figure 3. Composition Ⅱ]

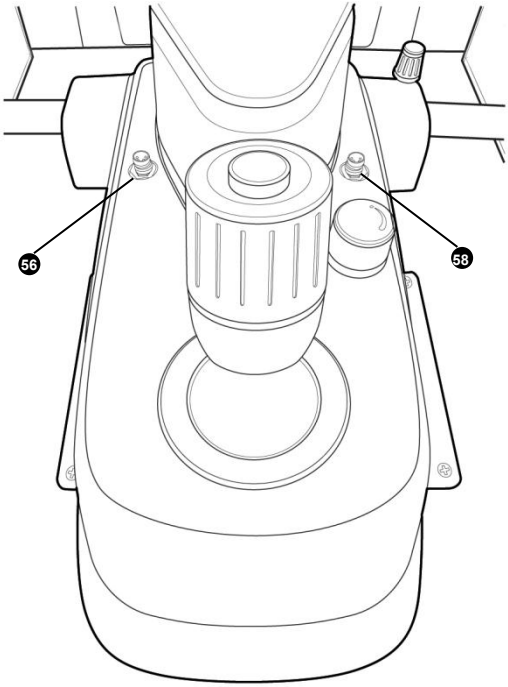

[Figure 4. Composition Ⅲ]

7. Installation

NOTE

The appliances are always supplied with excellent packaging to be able to stand up to all kinds of transport and standard storage conditions. Please contact the suppliers if any irregularities are found in the appliance due to transport after unpacking

7.1. Assembling the Instrument

- Put the table top on a very stable support. Block the two parts together by tightening the screws

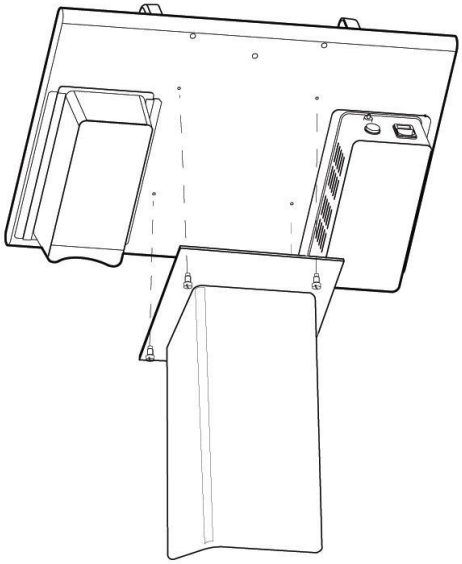

[Figure 5. Table Assembling]

- Place the head rest module(59) and make sure that its holes fit together With those of the table top. Tighten the screw with the screw driver

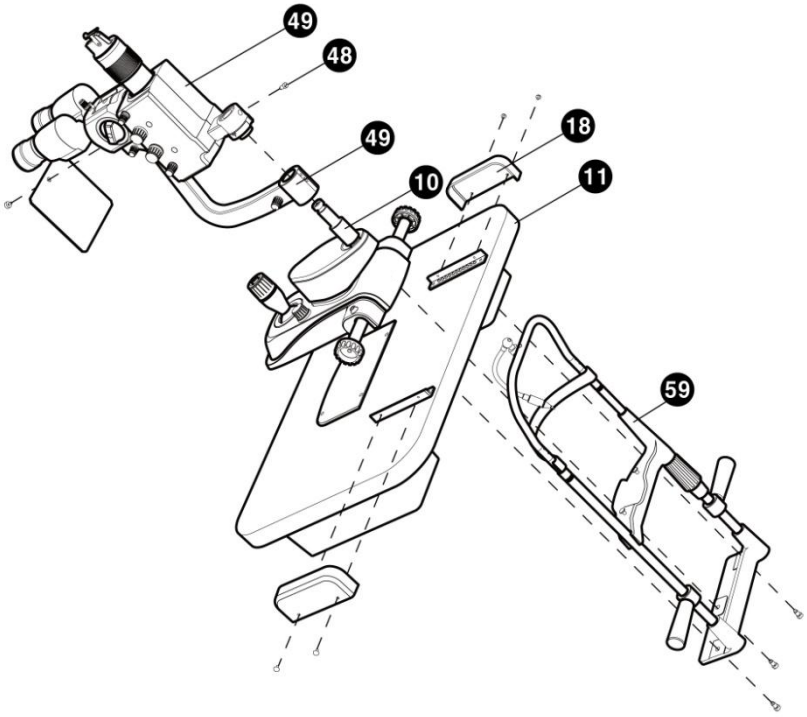

[Figure 6. Assembling the instrument I]

- Place the base with orthogonal movements on the guides situated on the upper part of the table top, checking that the wheels are in line. Then Place the crankcase(18) and make sure that its holes fit together with those of the toothed guides(17). Tighten the screw with the screw driver(+)

- Assemble the microscope arm(45) on the Base with orthogonal move ments(10).

- Assemble An optical group of the slit projector(49) on the Base with orthogonal movements(10). Then tighten the Guide screw with the screw driver(-)

- Put the microscope(31) in the right position making sure that it is placed well in the stop(37); then tighten it with the knob(34)situated the right side of the microscope.

- Fasten the breath screen(5) with the knob(4)

- Insert the connecting cable into the socket.

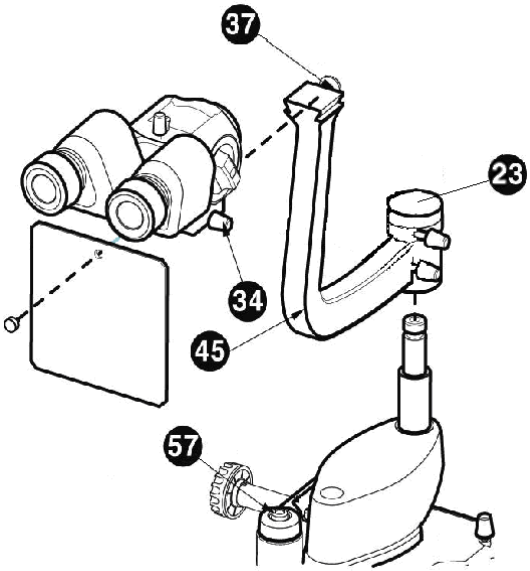

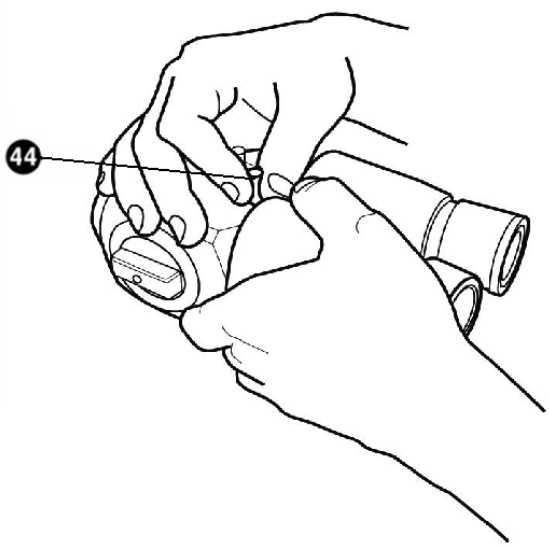

[Figure 7. Assembling the instrument II]

8. Trial Operations

- Assemble the chin-rest paper(47) on the chin-rest(27).
- Let the patient sit down comfortable with his chin on the chin-rest and his forehead against the forehead-rest.
- Lift or lower the chin-rest by moving the handle (25) so that the patient's eyes are in line with the notches on the chin-rest(29).
- Switch the instruments on, press the switch(13). You will see the warning light on (12).
- Adjust the luminous intensity by moving the selector(14).
- Frame and focus the eye to be examined by moving the joystick (9)

9. Main Features

Principal operative characteristics of the instrument:.

- Observation without settling or tiring and rapid change of enlargements.
- Base with cross-wise movement (which can be stopped) commanded by a single joystick for all adjustments(x y z).
- Stereomicroscopical observation of the eye with enlargements 6x-10x-16x-25x-40x(when use 12.5x eyepieces)
- Vertical tilting 0˚ ~ 20˚ of projection beam.
- Microscopy of the back part and of the posterior vitreous body by means of the Hruby lens or a contact options.(Goldman lens).
- Observation of the eye and valuation of the position of contact lenses in a fluorescent light.
- Tonometry with Goldman tonometer.
- Measurement of the cornea diameter and contact lenses.
- Survey which reveals the axis of the contact lens, thanks to the possible reading of the rotation angle of the slit which includes all the meridians.

10. Ordinary Maintenance

⚠ WARNING

The repairs illustrated below should all be carried out with the power cable disconnected from the main supply plug. Please contact the suppliers for any other problems that cannot be resolved by the operations described below.

Les réparations illustrées ci-dessous doivent toutes être effectuées avec le câble d'alimentation débranché de la prise d'alimentation principale. Veuillez contacter les fournisseurs pour tout autre problème qui ne peut pas être résolu par les opérations décrites ci-dessous.

⚠ CAUTION

Please turn off the power switch before replacing lamps. Please place lamps after cooling down. The heated lamp may burn your fingers.

Veuillez éteindre l'interrupteur d'alimentation avant de remplacer les lampes. Veuillez placer les lampes après refroidissement. La lampe chauffante peut vous brûler les doigts.

NOTE

Don’t touch any other parts of glass tube with the bare fingers. Fingerprints, if any, must be wiped off from the glass tube with alcohol

Ne touchez aucune autre partie du tube de verre à mains nues. Les empreintes digitales, le cas échéant, doivent être essuyées du tube de verre avec de l'alcool

10.1. Halogen Projection bulb or LED lamp

- Please contact the suppliers for any LED lamp problems.

  To replace the Halogen projection bulb proceed as follow.

- Before doing anything else, disconnect the plug from the main supply socket;
- Remove the Lamp cover(39),
- Remove the Lamp socket (32) from the bulb stems;
- Pull the burnt out bulb; be careful , it could be very hot;
- Replace it with a new one(12V30W Halogen) using the plastic envelope (never touch the bulb whit fingers)
- Fasten the bulb with the Bulb fastening knob
- Make sure that the stems of the bulb are completely inserted; insert the plug in the main supply socket

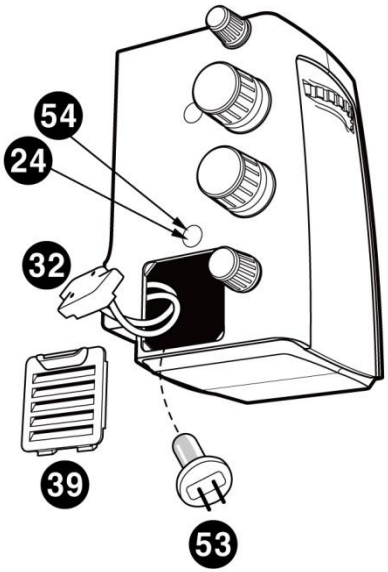

[Figure 8. Replace Halogen bulb]

⚠ WARNING

Don’t Touch to the Lamp House, During the Operation. It’s Heating up.

Ne touchez pas à la maison de la lampe pendant l'opération. Ça chauffe.

10.2. Protection fuses replacement

To replace the fuses proceed as follows:

- The protection fuses are placed on the back of the SMPS, and inserted power socket. Before doing anything else, disconnect the plug from the main supply socket
- Remove the burned-out fuses
- Substitute the fuses and check
- Replace the plug in the main supply socket.

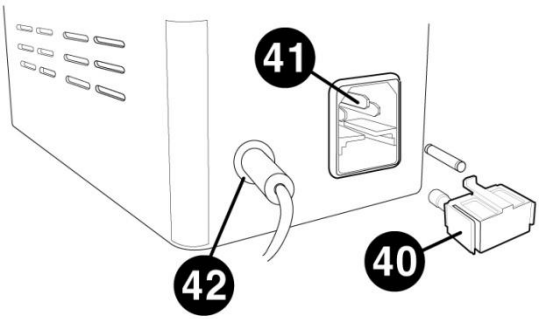

[Figure 9. Replace the fuse]

⚠ CAUTION

Replace fuses with the same rating and type(250Vac, T2.0AL)

10.3. Cleaning & Disinfection

- To keep the device clean, apply clinical alcohol and cidex or cidex plus on a soft cloth and scrub the body and the probe once a month. Do not use lacquer, thinner, ethylene, or the oxidizing substance.

- If the instrument is not in use, dust must be kept away by covering the instrument with the supplied plastic cover. Dust accumulating during the functioning of the instrument must be periodically removed with a very soft cloth or with a small pump.

10.4. Disposal

- To dispose the instrument, accessories, and components, follow local governing ordinances and recycling plans regarding disposal or recycling of instrument or device components.

- When disposing packing materials, sort them by the materials and follow local governing ordinances and recycling plans.

11. EMC Information

Manufacturer announcement – electromagnetic waves trouble

Electromagnetic waves trouble	
HS-7500 should be used in the below mentioned electromagnetic wave environment. HS-7500 purchaser or user needs to confirm whether HS-7500 is used in this type of environment.	
Trouble test	**Question of appropriateness**
RF emissions CISPR 11	Group 1
RF emissions CISPR 11	Class B
Harmonic emissions IEC 61000-3-2	Class B
Voltage fluctuations/flicker IEC 61000-3-3	Complies

Manufacturer announcement – electromagnetic waves tolerance

electromagnetic waves tolerance		
HS-7500 is to be used in the below designated electromagnetic wave environment. HS-7500 customer and user need to guarantee that the HS-7500 will be used in this type of environment.		
Tolerance test	**IEC 60601 test level**	**Appropriateness level**
Electrostatic discharge(ESD) IEC 61000 - 4 - 2	contact ±8 kV in the air ±15 kV	contact ±8 kV in the air ±15 kV
Electric rapid transients/bust IEC 61000 - 4 - 4	power supplying line ±2 kV input/output line ±1 kV	power supplying line ±2 kV input/output line ±1 kV
Surge IEC 61000 - 4 - 5	between lines ±1 kV between line and grounding ±2 kV	differential mode ±1 kV common mode ±2 kV
Voltage dip, instantaneous interruption, voltage fluctuation at the power input	For 0.5 cycle < 5 %*U*T(*UT's* > 95 % decrease) For 5 cycle 40 %*U*T(*UT's* 60 %	For 0.5 cycle < 5 %*U*T(*UT's* > 95 % decrease) For 5 cycle, 40 % *U*T(*UT's* 60 % decrease)

line IEC 61000 - 4 - 11	decrease) For 25 cycle 70 %*U*T(*UT's* 30 % decrease) For 5 seconds < 5 % *U*T(*UT's* > 95 % decrease)	For 25 cycle, 70 %*U*T(*UT's* 30 % decrease) For 5 seconds, < 5 % *U*T(*UT's* > 95 % decrease)
Power frequency magnetic field (50/60 Hz) IEC 61000 - 4 - 8	30 A/m	30 A/m
Other *U*T is the a.c. power voltage for before approving the test level.		

Electromagnetic waves tolerance		
HS-7500 is to be used in the below mentioned electromagnetic wave environment. HS-7500 purchaser or user needs to confirm whether HS-7500 issued at this environment.		
Tolerance test	**IEC 60601 test conditions**	**Appropriateness level**
Conductivity RF electromagnetic field IEC 61000 - 4 - 6	3 Vrms 150 kHz～80 MHz 6 Vrms in ISM band 6.765 MHz to 6.795 MHz 13.553 MHz to 13.567 MHz 26.957 MHz to 27.283 MHz 40.66 MHz to 40.70 MHz	3 Vrms 6 Vrms
Radioactivity RF electromagnetic field tolerance IEC 61000 - 4 - 3	3 V/m 80 MHz～2.7 GHz scope	3 V/m

12. Electric Diagram

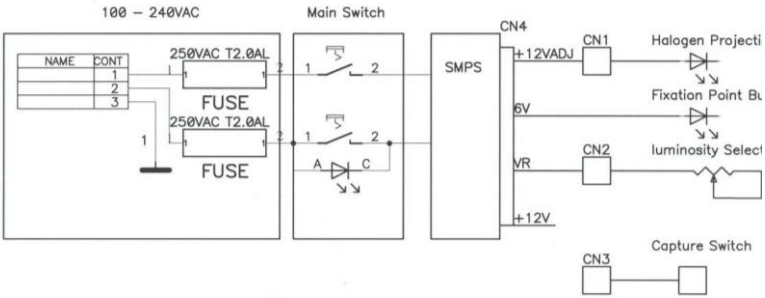

13. Technical Specifications

MICROSCOPE - HS-7500						
Model name	Halogen: HS-7500(HLG) LED : HS-7500(LED)					
Type	Galilean converging binocular					
Magnification	5 positions rotation drum					
Eyepiece	12.5x (Option 10x)					
Total magnification	6x	10x	16x	25x	40x	Drum Mark
	6x	10x	16x	25x	40x	12.5x Eyepiece
	4.8x	8x	12.8x	20x	32x	10x Eyepiece
Field of view	38.5, 24.0, 15.0, 9.0, 6.0 mm					
Pupil Distance	55 ~ 80 mm					
SLIT ILLUMINATION						
Slit length	0.3 ~ 14 mm					
Slit width	0 ~ 14 mm					
Slit projection	1.167x					
Aperture diaphragms	0.3/2.5/3.5/7/10/14 mm					
Filters	Cobalt blue, Red-free (Green filter), Gray and Heat- absorption, Yellow filter					
Slit rotation	0˚~180˚					
Angle of light	0˚~ 20˚					

BASE	
Vertical Movement	30mm
Longitudinal Movement	100mm.
Lateral Movement	100mm
Power supply	AC 100-240V, 50/60Hz, 0.8-0.5A(Halogen) AC 100-240V, 50/60Hz, 0.3-0.2A(LED)

14. Service Information

How to contact service: If there are any problems with the equipment, please follow the steps below:

- First of all, refer to the 10. Maintenance and 11. Troubleshooting sections according to the problem that you are encountered. And then follow the suggested sequences.
- If the problem persists, please contact the local distributor in your province or country at first.
- Before calling to the local distributor, you'd better check these information such as Model and Serial Numbers. To do so, fill up the following table as soon as you purchase our product. You can look up these information at any time. The serial number is found on the back of this unit. The serial number is unique to this unit. You should retain this manual as a permanent record of your purchase. Please retain your purchase receipt as your proof of purchase.

Date of Purchase: _____

Dealer's Name: _____

Dealer Address: _____

Dealer Phone No. : _____

Model No.: _____

Serial No.: _____

- If you can't contact with your local distributor, you can directly get in touch with the service department of the HUVITZ using the phone number and the address written in the below table.

■ How to Contact Huvitz Co., Ltd.

■ Huvitz Co., Ltd.
38, Burim-ro 170beon-gil, Dongan-gu, Anyang-si, Gyeonggi-do, 14055, Republic of Korea
Tel: +82-31-428-9100 Fax: +82-31-477-9022(F/A)
E-mail : svc@huvitz.com website : www.huvitz.com