FRA
Operator's Manual

SLIT LAMP MICROSCOPE HS-7500

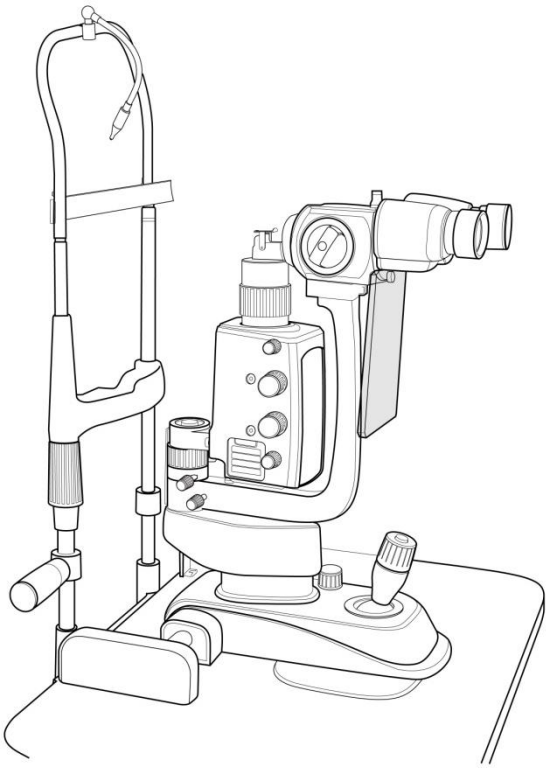

Huvitz
Pacing Progress toward People

IMPORTANT NOTICE

⚠ WARNING

Potential electromagnetic or other interference between medical equipments and other devices being operated together in the same environmental may expert an adverse influence on functioning of the medical equipment. Non-medical equipments not in compliance with the requirements of EN 60601-1 and EN 60601-1-2 should not be used together in the same environmental as the medical equipments

This equipment has been tested and found to comply with the limits for medical devices in IEC 60601-1-2:2001. These limits are designed to provide reasonable protection against harmful interference in a typical medical installation

Power Cord

For use of equipment in rated voltage less than 125Vac,minimum 6A,Type SJT or SVT , 18/3AWG,10A, max 3.0m long : One end with Hospital Grade Type, NEMA 5-15P Other end with appliance coupler. For use of equipment in rated voltage less than 250Vac,minimum 6A,Type SJT or SVT , 18/3AWG,10A, max 3.0m long : One end terminatesd with blade attachment plug(HAR) Type, NEMA 6-15P.

This product may malfunction due to electromagnetic waves caused by portable personal telephones, transceivers, radio-controlled toys, etc. Be sure to avoid having objects such as, which affect this product, brought near the product.

The information in this publication has been carefully checked and is believed to be entirely accurate at the time of publication. HUVITZ assumes no responsibility, however, for possible errors or omissions, or for any consequences resulting from the use of the information contained herein.

HUVITZ reserves the right to make changes in its products or product specifications at any time and without prior notice, and is not required to update this documentation to reflect such changes.

9000FRA0019 - A
(2023.11

©2009 HUVITZ Co., Ltd.
38, Burim-ro 170beon-gil, Dongan-gu, Anyang-si, Gyeonggi-do, 14055, Republic of Korea
All rights are reserved.
Under copyright laws, this manual may not be copied, in whole or in part, without the prior written consent of HUVITZ Co., Ltd.

Contents

1. Introduction.....6

1.1. Indication for use(intended use).....6

1.2. Classification.....6

2. Safety Information 7

2.1. Introduction.....7

2.2. Safety Symbols.....8

2.3. Environment factors.....8

2.4. Safety Precautions.....14

3. Features & Operating Condition 16

3.1. Brief Description.....16

3.2. Operating Condition.....16

4. Standard Components.....18

5. Accessories 19

6. Composition.....20

7. Installation.....26

7.1. Assembling the Instrument.....26

8. Trial Operations 30

9. Main Features.....31

10. Ordinary Maintenance 32

10.1. Halogen Projection bulb or LED lamp 32
10.2. Protection fuses replacement..... 34
10.3. Cleaning & Disinfection..... 35
10.4. Disposal 35

11. EMC Information..... 36

11.1. Guidance and manufacturer's declaration – electromagnetic emissions 36
11.2. Guidance and manufacturer's declaration – electromagnetic immunity . 37
11.3. Guidance and manufacturer's declaration – electromagnetic immunity . 39
11.4. Recommended separation distances between portable and mobile RF communications equipment and the EUT 41
11.5. Immunity and Compliance Level 42
11.6. Guidance and manufacturer's declaration – electromagnetic immunity . 43

12. Electric Diagram 45

13. Technical Specifications 46

14. Service Information 48

15. Particular Information 49

15.1. Relative spectral output graph 49

1. Introduction

1.1. Indication for use(intended use)

The SLIT LAMP, HS-7500 is intended for use in eye examination of the anterior eye segments, from the cornea epithelium to the posterior capsule. It is used to aid in the diagnosis of diseases or trauma which affect the structural properties of the anterior eye segment.

1.2. Classification

- Protection against electric shock: Class I
- Applied Parts: Type B applied parts.
- Protection against harmful ingress of water: Ordinary, IPX0
- Degree of safety in the presence of a flammable anesthetics mixture with air or with oxygen or with nitrous oxide: Not suitable for use in the presence of a flammable anesthetics mixture with air or with oxygen or with nitrous oxide.
- Mode of operation: Continuous
- Light Hazard protection Classification: Group 2 by ISO15004-2:2007
- Stationary: Do not try to move this equipment without help. This microscope is heavy and should maintain stationary. Always get two persons to help lift this unit

⚠ CAUTION

Federal law restricts this device to sale by or on the order of a physician

2. Safety Information

2.1. Introduction

Safety is everyone's responsibility. The safe use of this equipment is largely dependent upon the installer, user, operator, and maintainer. It is imperative that personnel study and become familiar with this entire manual before attempting to install, use, clean, service or adjust this equipment and any associated accessories. It is paramount that the instructions contained in this manual are fully understood and followed to enhance safety to the patient and the user/operator. It is for this reason that the following safety notices have been placed appropriately within the text of this manual to highlight safety related information or information requiring special emphasis. All users, operators, and maintainers must be familiar with and pay particular attention to all Warnings and Cautions incorporated herein.

⚠ WARNING

"Warning" indicates the presence of a hazard that could result in severe personal injury, death or substantial property damage if ignored.

NOTE

"Note" describes information for the installation, operation, or maintenance of which is important but hazard related if ignored.

⚠ CAUTION

"Caution" indicates the presence of a hazard that could result in minor injury, or property damaged if ignored.

2.2. Safety Symbols

The International Electrotechnical Commission (IEC) has established a set of symbols for medical electronic equipment which classify a connection or warn of any potential hazards. The classifications and symbols are shown below.
This applies only to the instrument that has the certification symbol printed explicitly on the product label or sticker.

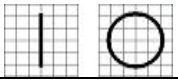	I and O on power switch represent ON and OFF respectively. (O sur l'interrupteur d'alimentation représentent respectivement ON et OFF.)
	Type B Isolated patient connection. (Type B Connexion patient isolée.)
	This symbol identifies a safety note. Ensure you understand the function of this control before using it. Control function is described in the appropriate User's or Service Manual. (Ce symbole identifie une note de sécurité. Assurez-vous de comprendre la fonction de ce contrôle avant de l'utiliser. La fonction de contrôle est décrite dans le manuel d'utilisation ou d'entretien approprié.)
	It indicates the year of manufacture and the manufacturer. (Il indique l'année de fabrication et le fabricant.)
	Manufacturer (Fabricant)
	Authorised Representative in the European Community (Représentant autorisé dans la Communauté européenne)

	Identifies the point where the system safety ground is fastened to the chassis. Protective earth connected to conductive parts of Class I equipment for safety purposes. (Identifie le point où la terre de sécurité du système est fixée au châssis. Terre de protection connectée aux parties conductrices des équipements de classe I à des fins de sécurité.)
	Alternating Current (Courant alternative)
	Temperature Limitation (Limitation de température)
	Keep DRY (Garder au sec)
  UL60601-1 CAN/CSA C22.2 NO.601.1	MEDICAL EUIPMENT WITH RESPECT TO ELECTRIC SHOCK FIRE AND MECHANICAL HAZARDS ONLY IN ACCORDANCE WITH UL 2601-1, AND CAN/CSA C22.2 NO.601.1 (ÉQUIPEMENT MÉDICAL À L'ÉGARD DU CHOC ÉLECTRIQUE RISQUES D'INCENDIE ET DE MÉCANIQUE SEULEMENT EN CONFORMITÉ AVEC UL 2601-1, ET CAN / CSA C22.2 NO.601.1)

	WEEE mark Disposal of your old appliance When this crossed-out wheeled bin symbol is attached to a product it means the product is covered by the European Directive 2002/96/EC. All electrical and electronic products should be disposed of separately from the municipal waste stream via designated collection facilities appointed by the government or the local authorities. The correct disposal of your old appliance will help prevent potential negative consequences for the environment and human health. For more detailed information about disposal of your old appliance, please contact your city office, waste disposal service or the shop where you purchased the product. (Mise au rebut de votre ancien appareil Lorsque ce symbole de poubelle barrée est joint à un produit, cela signifie que le produit est couvert par la directive européenne 2002/96 / CE. Tous les produits électriques et électroniques doivent être éliminés séparément du flux des déchets municipaux via des installations de collecte désignées par le gouvernement ou les autorités locales. L'élimination correcte de votre ancien appareil aidera à prévenir les conséquences négatives potentielles sur l'environnement et la santé humaine. Pour plus d'informations sur l'élimination de votre ancien appareil, veuillez contacter votre mairie, le service d'élimination des déchets ou le magasin où vous avez acheté le produit.)
	CE Mark (Marque CE)
	CE for RoHS RoHS Directive Compliance 2011/65/EU (CE pour RoHS Conformité à la directive RoHS 2011/65 / UE)
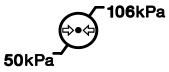	Atmospheric pressure limitation (Limitation de pression atmosphérique)

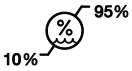	Humidity limitation (Limite d'humidité)
	Stack direction (Direction de la pile)
	Fragile , handle with care (Fragile, manipuler avec soin)
	Keep away from sunlight (Tenir à l'écart de la lumière du soleil)
	Stack layer limitation (Limiter la couche de pile)
	Use no hooks (N'utilisez aucun crochet)
	Consult instructions for use (Consulter les instructions d'utilisation)
	Serial Number Symbol (Symbole du numéro de série)

2.3. Environment factors

Avoid the following environments for operation or storage:

	Where the equipment is exposed to water vapor. Don't operate an equipment with a wet hand.
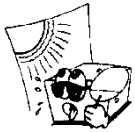	Where the equipment is exposed to direct sunlight.
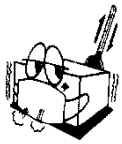	Where the temperature changes extremely. Normal operating temperature range is from 10°C to 40°C, Humidity is from 30% to 75%. Altitude is from 700 to 1060hpa
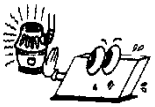	Where it is near the heat equipment.
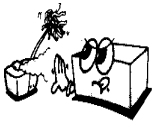	Where the humidity is extremely high or there is a ventilation problem.
	Where the equipment is subject to excessive shocks or vibrations.

	Where equipment is exposed to chemical material or explosive gas.
	Be careful not to be inserted dust, especially, metal.
	Don't disassemble the product or open. We aren't responsible for it for nothing.
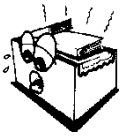	Be careful not to close the fan located on the lateral or back side of the equipment.
	Don't plug the AC power cord into the outlet before the connection between devices of the equipment is completed. This can generate the defect.
	Pull out the power cord with holding the plug, not the cord.

Avoid places where the ambient temperature falls below 10℃ or exceeds 40℃ for normal operation, or below -10℃ or exceeds 40℃ (14°F-104°F) for transportation and storage. Humidity should be maintained between 30 and 75% for normal operation, transportation and storage. The atmospheric pressure in operation, transportation and storage is from 700 to 1060hpa.

2.4. Safety Precautions

This equipment has been developed and tested according to safety standards as well as national and international standards. This guarantees a very high degree of safety for this device. The legislator expects us to inform the user expressively about the safety aspects in dealing with the device. The correct handling of this equipment is imperative for its safe operation. Therefore, please read carefully all instructions before switching on this device. For more detailed information, please contact our Customer Service Department or one of our authorized representatives.

1. This equipment must not be used (a) in an area that is in danger of explosions and (b) in the presence of flammable, explosive, or volatile solvent such as alcohol, benzene or similar chemicals.

2. Do not put or use this device in humid rooms. Humidity should be maintained between 30 and 75% for normal operation. Do not expose the device to water splashes, dripping water, or sprayed water. Do not place containers containing fluids, liquids, or gases on top of any electrical equipment or devices.

3. The equipment must be operated only by, or under direct supervision of a properly trained and qualified person.

4. Modifications of this equipment may only be carried out by Huvitz's service technicians or other authorized persons.

5. Customer maintenance of this equipment may only be performed as stated in the User's Manual and Service Manual. Any additional maintenance may only be performed by Huvitz's service technicians or other authorized persons.

6. The manufacturer is only responsible for effects on safety, reliability, and performance of this equipment when the following requirements are fulfilled: (1) The electrical installation in the respective room corresponds to the specifications stated in this manual and (2) This equipment is used, operated,
and maintained according to this manual and Service Manual.

7. The manufacturer is not liable for damage caused by unauthorized tampering with the device(s). Such tampering will forfeit any rights to claim under warranty.

8. This equipment may only be used together with accessories supplied by Huvitz's. If the customer makes use of other accessories, use them only if their safe usability under technical safety aspects has been proved and confirmed by Huvitz or the manufacturer of the accessory.

9. Only persons who have undergone proper training and instructions are authorized to install, use, operate, and maintain this equipment.

10. Keep the User's Manual and Service Manual in a place easily accessible at all times for persons operating and maintaining the equipment.

11. Do not force cable connections. If a cable does not connect easily, be sure that the connector (plug) is appropriate for the receptacle (socket). If you cause any damage to a cable connector(s) or receptacle(s), let the damage(s) be repaired by an authorized service technician.

12. Please do not pull on any cable. Always hold on to the plug when disconnecting cables.

13. Before every operation, visually check the equipment for exterior mechanical damage(s) and for proper function.

14. Do not cover any ventilation grids or slits.

15. Immediately turn off and unplug any equipment that gives off smoke, sparks, strange noises, or odors.

16. Power Supply Cord set (international) - (Detachable) Rated 10 A, 250 V. Plug type CEE 7/VII, Connector type IEC 60320/C13, and Cord type H05VV-F3G, min. 0.75 mm2, 3-conductor terminating in molded-on grounding type attachment plug. <HAR> marked on the cord. Maximum 4.0 m long.

3. Features & Operating Condition

3.1. Brief Description

The device works like all slit lamps:

- stereomicroscopic examination of the eye under the slit light.
- microscopic examination of the ocular fundus and posterior vitreous body (using hubry's lens).

These devices are designed for use by ophthalmologists and optometrists(within the realms of their respective professions) for specific diagnostic procedures(bio-microscopic examination of the eye)

3.2. Operating Condition

- As long as the slit lamp is in its original package it can be exposed to the following environmental conditions for up to 15 weeks for shipping and storage without risk of damage:
  - Temperature range : from –10˚C to +40˚C;
  - Relative humidity range: from 30% to75%;

- The device is made to operate under the following environmental conditions:
  - Temperature range : from +10˚C to +40˚C;
  - Relative humidity range: from 30% to 75%;

The device neither generates nor receives electromagnetic interference when used near other equipment. Therefore, no preventive or corrective measures are required

⚠ CAUTION

Because prolonged intense light exposure can damage the retina, the use of the device for ocular examination should not be unnecessarily prolonged, and the brightness setting should not exceed what is needed to provide clear visualization of the target structures. This device should be used with filters that eliminate UV radiation(<400nm)and, whenever possible, filters that eliminate short-wavelength blue light(<420nm).

The retinal exposure dose for a photochemical hazard is a product of the radiance and the exposure time. If the value of radiance were reduced in half, twice the time would be needed to reach the maximum exposure limit.

While no acute optical radiation hazards have been identified for slit lamps, it is recommended that the intensity of light directed into the patient's eye be limited to the minimum level which is necessary for diagnosis. Infants, aphakes and persons with diseased eyes will be at greater risk. The risk may also increased of the person being examined has had any exposure with the same instrument or any other ophthalmic instrument using a visible light source during the previous 24 hours. This will apply particularly if the eye has been exposed to retinal photography

4. Standard Components

The instrument is delivered in package. Taking it out of the package, make sure that none of the following parts is missing.

- A table top(11)(N.B. the table top isn't supplied with the slit lamp for twin table) on which are placed: A SMPS box(15) including the main switch & a warning light (13), Two sliding guides for the base with orthogonal movements(17), A sliding plate for the position device(19), A drawer(16);

  If Unit Table (61) is selected as an option, a metal table will be provided instead of the standard top plate (11).

- A base with orthogonal movements.

- A microscope with either dual magnification or a system(31) including eyepieces.

- An optical group of the slit projector.

- A head rest module(59).

- A microscope arm(45).

- This manual.

- A set of accessories including; two wheels for the sliding guides(18); a setting rod(43); a protective cover(46); a spare bulb 12V 30W Halogen bulb(53) – Except LED model; two protection fuses(48); a breath screen(5); a chin-rest paper(47);a hole cover(45); a power cable; two patient's handles(50)

5. Accessories

The following standard accessories are provided with the instrument;

- protection cover(46)
- a setting rod(43)
- spare bulbs
  12V 30W Halogen bulb(53) – Except LED model
- chin-rest paper(47)
- spare fuses 250Vac T2.0AL
- a breath screen(5)
- power cable

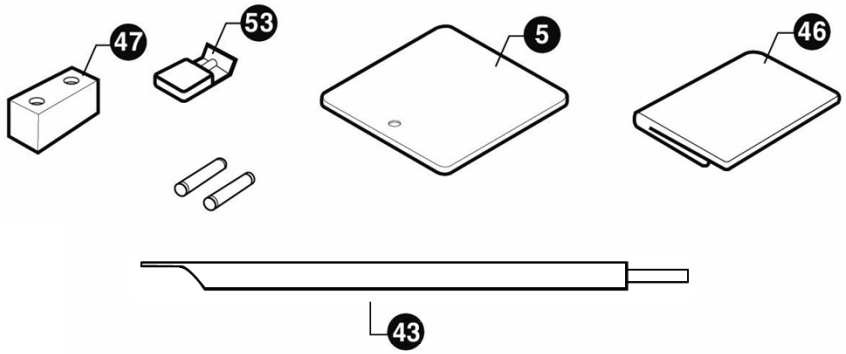

[Figure 1. Accessories]

6. Composition

1) Fixation point
2) Control lever for changing enlargement
3) Removable eye-pieces
4) Knob for clamping the breath screen
5) Breath screen
6) Knobs to change the slit length
7) Connecting plug of the projector lamp
8) Knurled ring for filters insertion
9) Joystick for lateral, longitudinal and vertical movements(x y z)
10) Base with orthogonal movements
11) Shaped tabletop
12) Warning light indicating the ignition of the SMPS is on
13) Main switch & Warning light
14) Luminosity selector
15) SMPS box
16) Drawer
17) Toothed guides
18) Wheel protection crankcases
19) Sliding plate
20) Knob to lock the projector
21) Scale for the projector position
22) Knob to lock the arm of the microscope
23) Hole cover
24) Cover holder screw
25) Control handle for the vertical setting of the chin-rest

26) Locking pins for chin rest paper
27) Chin rest
28) Knobs to change the slit width
29) Pointer for the eye positioning
30) Forehead Rest
31) Microscope
32) Lamp socket
33) Knob to lock the base of the instrument
34) Knob to lock the microscope
35) Control handle for horizontal tilting
36) Control handle for vertical tilting
37) Microscope position stop
38) Knobs to change the slit rotation 90-0-90
39) Lamp cover
40) fuse slots
41) Connecting plug
42) Fixation point connector
43) Setting rod
44) Microscope separation knob
45) Microscope arm
46) Protection cover
47) Chin rest papers
48) Guide screw
49) An optical group of the slit projector (Halogen or LED)
50) Patient's handle
51) Head rest fastening screw
52) Wheel
53) Halogen bulb 12V 30W

54) Bulb fastening knob
55) Prism
56) Capture connector (For the image system)
57) Capture switch
58) Luminosity selector connector (Connect the Luminosity selector to the SMPS)
59) Head rest module
60) Diffuser
61) Unit Table (Option)

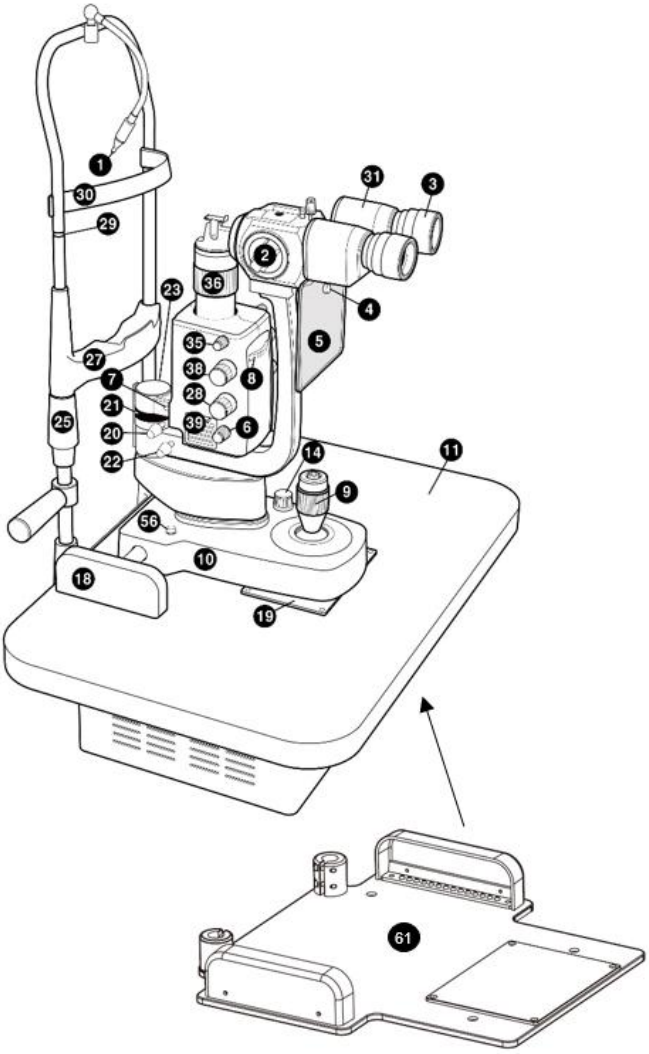

[Figure 2. Composition I]

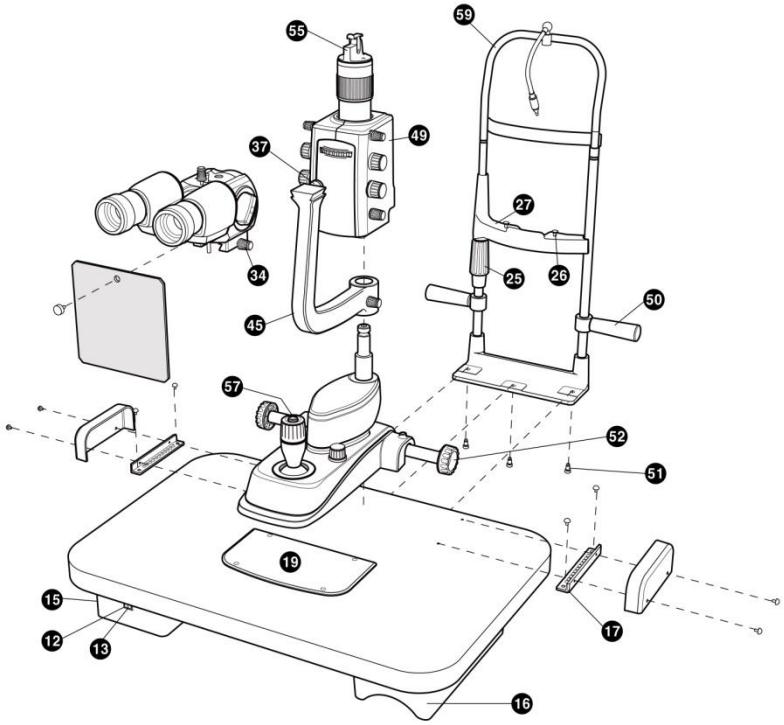

[Figure 3. Composition II]

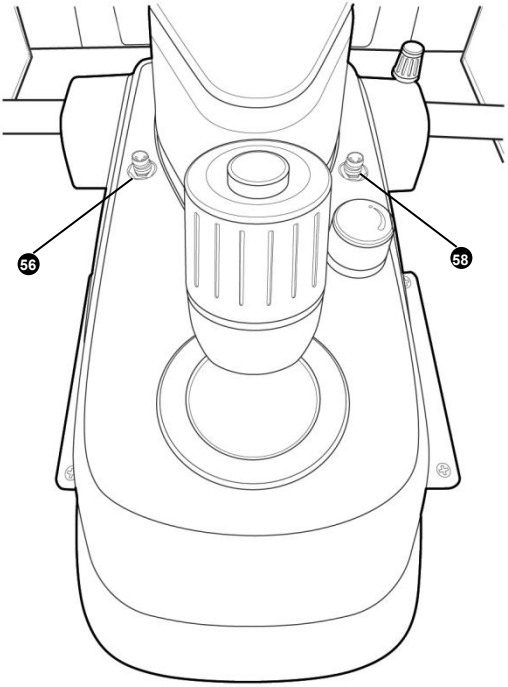

[Figure 4. Composition Ⅲ]

7. Installation

NOTE

The appliances are always supplied with excellent packaging to be able to stand up to all kinds of transport and standard storage conditions. Please contact the suppliers if any irregularities are found in the appliance due to transport after unpacking

7.1. Assembling the Instrument

- Put the table top on a very stable support. Block the two parts together by tightening the screws

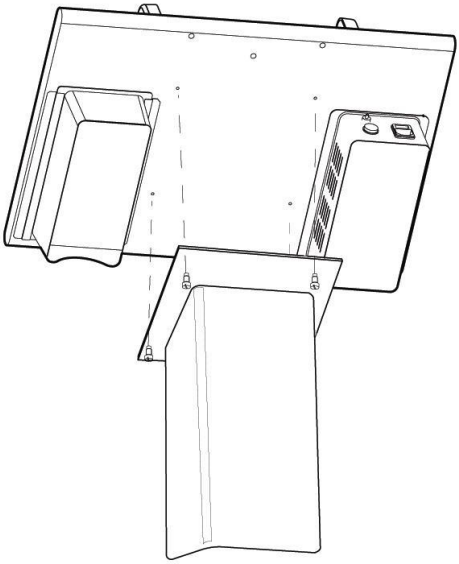

[Figure 5. Table Assembling]

- Loosen the hex socket head screw (51) at the bottom of the top plate where the headrest (59) will be mounted. Align the mounting holes of the bottom of the top plate and the headrest, then tighten the screw using a wrench.

- Align the wheels of the orthogonal movement base with the guide rails mounted on the top plate. Make sure the wheels are positioned symmetrically on both sides. Then, secure the base using the base locking handle (33) located on the right side of the base.

- Next, secure the guide rail case (18).

- Put the microscope(31) in the right position making sure that it is placed well in the stop(37); then tighten it with the knob(34) situated the right side of the microscope.

- Fasten the breath screen(5) with the knob(4)

- Insert the connecting cable into the socket.

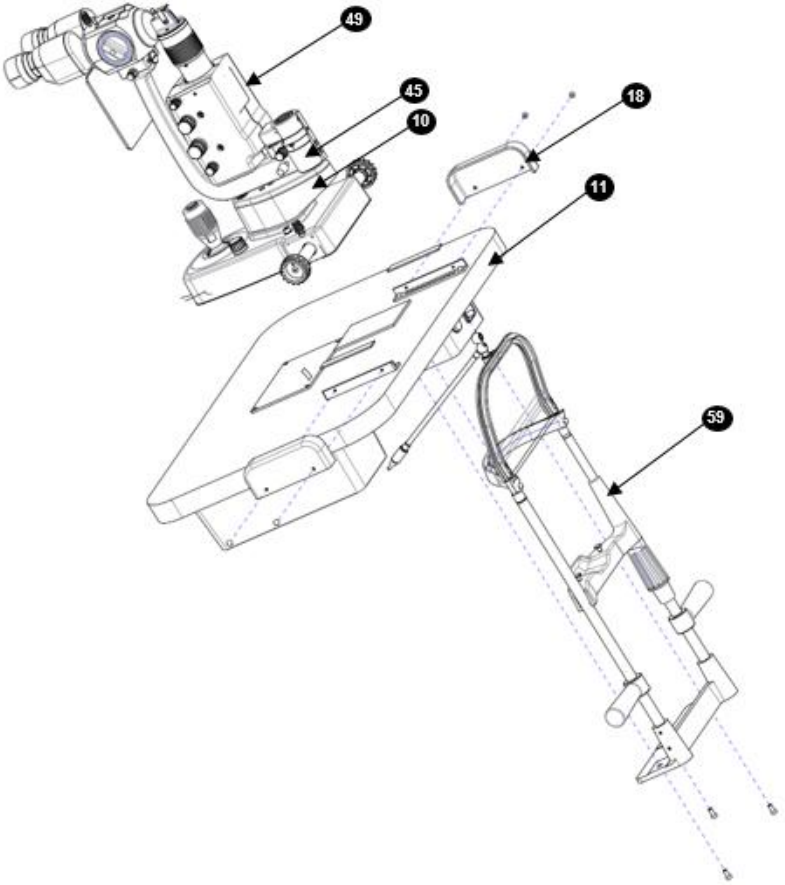

[Figure 6. Assembling the instrument I]

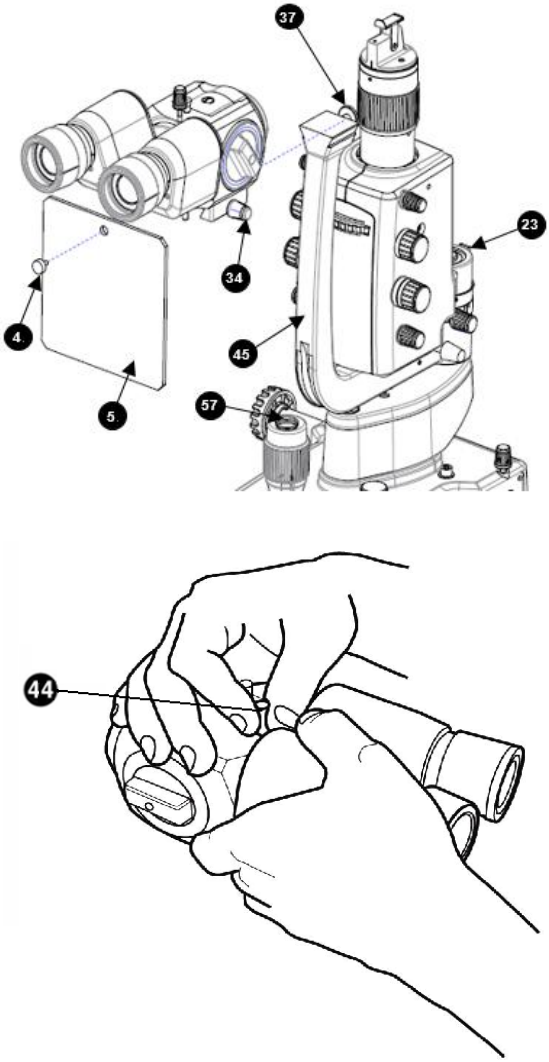

[Figure 7. Assembling the instrument Ⅱ]

8. Trial Operations

- Assemble the chin-rest paper(47) on the chin-rest(27).
- Let the patient sit down comfortable with his chin on the chin-rest and his forehead against the forehead-rest.
- Lift or lower the chin-rest by moving the handle (25) so that the patient's eyes are in line with the notches on the chin-rest(29).
- Switch the instruments on, press the switch(13). You will see the warning light on (12).
- Adjust the luminous intensity by moving the selector(14).
- Frame and focus the eye to be examined by moving the joystick (9)

9. Main Features

Principal operative characteristics of the instrument:.

- Observation without settling or tiring and rapid change of enlargements.
- Base with cross-wise movement (which can be stopped) commanded by a single joystick for all adjustments(x y z).
- Stereomicroscopical observation of the eye with enlargements 6x-10x-16x-25x-40x(when use 12.5x eyepieces)
- Vertical tilting 0˚ ~ 20˚ of projection beam.
- Microscopy of the back part and of the posterior vitreous body by means of the Hruby lens or a contact options.(Goldman lens).
- Observation of the eye and valuation of the position of contact lenses in a fluorescent light.
- Tonometry with Goldman tonometer.
- Measurement of the cornea diameter and contact lenses.
- Survey which reveals the axis of the contact lens, thanks to the possible reading of the rotation angle of the slit which includes all the meridians.

10. Ordinary Maintenance

⚠ WARNING

The repairs illustrated below should all be carried out with the power cable disconnected from the main supply plug. Please contact the suppliers for any other problems that cannot be resolved by the operations described below.

⚠ CAUTION

Please turn off the power switch before replacing lamps. Please place lamps after cooling down. The heated lamp may burn your fingers.

NOTE

Don't touch any other parts of glass tube with the bare fingers. Fingerprints, if any, must be wiped off from the glass tube with alcohol

10.1. Halogen Projection bulb or LED lamp

- Please contact the suppliers for any LED lamp problems.

  To replace the Halogen projection bulb proceed as follow.

- Before doing anything else, disconnect the plug from the main supply socket;
- Remove the Lamp cover(39),
- Remove the Lamp socket (32) from the bulb stems;
- Pull the burnt out bulb; be careful , it could be very hot;

- Replace it with a new one(12V30W Halogen) using the plastic envelope (never touch the bulb whit fingers)
- Fasten the bulb with the Bulb fastening knob
- Make sure that the stems of the bulb are completely inserted; insert the plug in the main supply socket

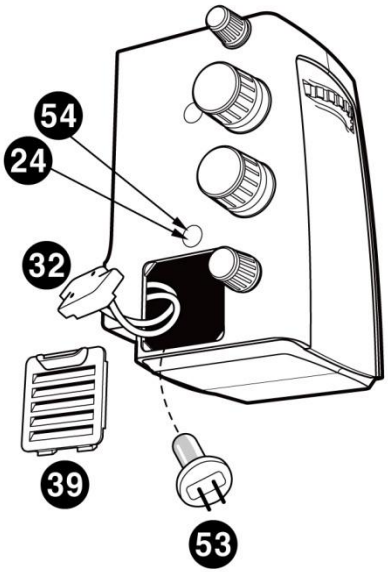

[Figure 8. Replace Halogen bulb]

⚠ WARNING

Don't Touch to the Lamp House, During the Operation.
It's Heating up.

10.2. Protection fuses replacement

To replace the fuses proceed as follows:

- The protection fuses are placed on the back of the SMPS, and inserted power socket. Before doing anything else, disconnect the plug from the main supply socket
- Remove the burned-out fuses
- Substitute the fuses and check
- Replace the plug in the main supply socket.

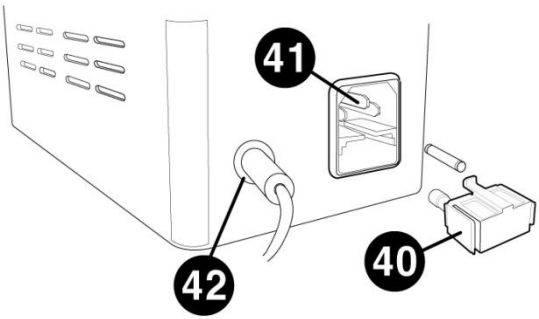

[Figure 9. Replace the fuse]

⚠ CAUTION

Replace fuses with the same rating and type(250Vac, T2.0AL)

10.3. Cleaning & Disinfection

- To keep the device clean, apply clinical alcohol and cidex or cidex plus on a soft cloth and scrub the body and the probe once a month. Do not use lacquer, thinner, ethylene, or the oxidizing substance.

- If the instrument is not in use, dust must be kept away by covering the instrument with the supplied plastic cover. Dust accumulating during the functioning of the instrument must be periodically removed with a very soft cloth or with a small pump.

10.4. Disposal

- To dispose the instrument, accessories, and components, follow local governing ordinances and recycling plans regarding disposal or recycling of instrument or device components.

- When disposing packing materials, sort them by the materials and follow local governing ordinances and recycling plans.

11. EMC Information

11.1. Guidance and manufacturer's declaration – electromagnetic emissions

The EUT is intended for use in the electromagnetic environment specified below. The customer or the user of the EUT should assure that it is used in such an environment.		
Immunity test	**Compliance**	**Electromagnetic environment - guidance**
RF Emissions CISPR 11	Group 1	The EUT uses RF energy only for its internal function. Therefore, its RF emissions are very low and are not likely to cause any interference in nearby electronic equipment
RF Emissions CISPR 11	Class B	The EUT is suitable for use in ail establishments, including domestic establishments and those directly connected to the public low-voltage power supply network that supplies buildings used for domestic purposes
Harmonic emissions IEC 61000-3-2	Class A	
Voltage fluctuations/ Flicker emissions IEC 61000-3-3	Complies	

11.2. Guidance and manufacturer's declaration

– electromagnetic immunity

The EUT is intended for use in the electromagnetic environment specified below. The customer or the user of the EUT should assure that it is used in such an environment.			
Immunity test	**IEC 60601 Test level**	**Compliance level**	**Electromagnetic environment -guidance**
Electrostatic discharge (ESD) IEC 61000-4-2	±6kV Contact ±8kV air	±6kV Contact ±8kV air	Floors should be wood, concrete or ceramic tile. If floors are covered with synthetic material, the relative humidity should be at least 30%.
Electrical fast transient/burst IEC 61000-4-4	±2kV for power supply lines ± 1kV for input/output lines	±2kV for power supply lines ± 1kV for input/output lines	Mains power quality should be that of a typical commercial or hospital environment.
Surge IEC 61000-4-5	±1kV differential mode ±2kV common mode	±1kV differential mode ±2kV common mode	Mains power quality should be that of a typical commercial or hospital environment.
Voltage dips, short interruptions and voltage variations on power supply input lines IEC 61000-4-11	<5% Uт (>95% dip in Uт) for 0.5cycle 40% Uт (60% dip in Uт) for 5 cycle 70% Uт (30% dip in Uт) for 25 cycle <5% Uт	<5% Uт (>95% dip in Uт) for 0.5cycle 40% Uт (60% dip in Uт) for 5 cycle 70% Uт (30% dip in Uт) for 25 cycle <5% Uт (<95% dip in Uт)	Mains power quality should be that of a typical commercial or hospital environment. If the user of the EUT image intensifier require continued operation during power mains interruptions, it is recommended that the

	(<95% dip in Uт) for 5 s	for 5 s	EUT image intensifier be powered from an uninterruptible power supply or a battery.
Power frequency (50/60Hz) magnetic field IEC 61000-4-8	3 A/m	3 A/m	Power frequency magnetic fields should be at levels character ristic of a typical location in a typical commercial or hospital environment.
NOTE Uт is the a.c. mains voltage prior to application of the test level.			

11.3. Guidance and manufacturer's declaration

– electromagnetic immunity

The EUT is intended for use in the electromagnetic environment specified below. The customer or the user of the EUT should assure that it is used in such an environment.

Immunity test	IEC 60601 test level	Compliance level	Electromagnetic environment - guidance
Conducted RF IEC 61000-4-6	3 Vrms 150 kHz to 80MHz	3 Vrms 150 kHz to 80MHz	Portable and mobile RF communications equipment should be used no closer to any part of the EUT, including cables, than the recommended separation distance calculated from the equation applicable to the frequency of the transmitter.
Radiated RF IEC 61000-4-3	3 V/m 80 MHz to 2.5GHz	3 V/m 80MHz to 2.5GHz	**Recommended separation distance** $d = [\frac{3,5}{V_1}]\sqrt{P}$ $d = [\frac{3,5}{E_1}]\sqrt{P}$ 80 MHz to 800 MHz $d = [\frac{7}{E_1}]\sqrt{P}$ 800 MHz to 2,5 GHz where P is the maximum output power rating of the transmitter in watts (W) according to the transmitter manufacturer and d is the recommended separation distance in

			meters (m). Field strengths from fixed RF transmitters, as deter-mined by an electromagnetic site survey, [a] should be less than the compliance level in each frequency range. [b] Interference may occur in the vicinity of equipment marked with the following symbol : 

NOTE 1) At 80MHz and 800MHz, the higher frequency range applies.
NOTE 2) These guidelines may not apply in all situations. Electromagnetic propagation is affected by absorption and reflection from structures, objects and people.

[a] Field strengths from fixed transmitters, such as base stations for radio (cellular/cordless) telephones and land mobile radios, amateur radio, AM and FM radio broadcast and TV broadcast cannot be predicted theoretically with accuracy. To assess the electromagnetic environment due to fixed RF transmitters, an
electromagnetic site survey should be considered. If the measured field strength in the location in which the EUT is used exceeds the applicable RF compliance level above, the EUT should be observed to verify normal operation. If abnormal performance is observed, additional measures may be necessary, such as re-orienting or relocating the EUT.

[b] Over the frequency range 150kHz to 80MHz, field strengths should be less than $[V_1]$ V/m.

11.4. Recommended separation distances between portable and mobile RF communications equipment and the EUT

The is intended for use in an electromagnetic environment in which radiated RF disturbances are controlled. The customer or the user of the EUT can help Prevent electromagnetic interference by maintaining a minimum distance between portable and mobile RF communications equipment (transmitters) and the EUT as recommended below, according to the maximum output power of the communications equipment.

Rated maximum output power of transmitter [W]	Separation distance according to frequency of transmitter [m]		
	150kHz to 80MHz $d = [\frac{3,5}{V_1}]\sqrt{P}$	80MHz to 800MHz $d = [\frac{3,5}{E_1}]\sqrt{P}$	800MHz to 2.5GHz $d = [\frac{7}{E_1}]\sqrt{P}$
	V_1=3Vrms	E_1=3V/m	E_1=3V/m
0.01	0.116	0.1166	0.2333
0.1	0.368	0.3687	0.7378
1	1.166	1.1660	2.3333
10	3.687	3.6872	7.3785
100	11.660	11.6600	23.333

For transmitters rated at a maximum output power not listed above, the recommended separation distance d in metres (m) can be estimated using the equation applicable to the frequency of the transmitter, where p is the maximum output power rating of the transmitter in watts (W) according to the transmitter
manufacturer.

NOTE 1) At 80MHz and 800MHz, the separation distance for the higher frequency range applies.

NOTE 2) These guidelines may not apply in all situations. Electromagnetic propagation is affected by absorption and reflection from structures, objects and people.

11.5. Immunity and Compliance Level

Immunity test	IEC 60601 Test Level	Actual Immunity Level	Compliance Level
Conducted RF IEC 61000-4-6	3Vrms 150kHz to 80MHz	3Vrms	3Vrms
Radiated RF IEC 61000-4-3	3Vrms 80MHz to 2.5GHz	3V/m	3V/m

11.6. Guidance and manufacturer's declaration – electromagnetic immunity

The EUT is intended for use in the electromagnetic environment specified below. The customer or the user of the EUT should assure that it is used in such an electromagnetic environment.

Immunity test	IEC 60601 test level	Compliance level	Electromagnetic environment - guidance
Conducted RF IEC 61000-4-6	3 Vrms 150 kHz to 80MHz	3 Vrms 150 kHz to 80MHz	The EUT must be used only in a shielded location with a minimum RF shielding effectiveness and, for each cable that enters the shielded location with a minimum RF shielding effectiveness and, for each cable that enters the shielded location
Radiated RF IEC 61000-4-3	3 V/m 80 MHz to 2.5GHz	3 V/m 80MHz to 2.5GHz	Field strengths outside the shielded location from fixed RF transmitters, as determined by an electromagnetic site survey, should be less than 3V/m.[a] Interference may occur in the vicinity of equipment marked with the following symbol: 

NOTE 1) These guidelines may not apply in all situations. Electromagnetic propagation is affected by absorption and reflection from structures, objects and people.

NOTE 2) It is essential that the actual shielding effectiveness and filter attenuation of the shielded location be verified to assure that they meet the minimum specification.

[a] Field strengths from fixed transmitters, such as base stations for radio (cellular/cordless) telephones and land mobile radios, amateur radio, AM and FM radio broadcast and TV broadcast cannot be predicted theoretically with accuracy. To assess the electromagnetic environment due to fixed RF transmitters, an

electromagnetic site survey should be considered. If the measured field strength outside the shielded location in which the EUT is used exceeds 3V/m, the EUT should be observed to verify normal operation.

If abnormal performance is observed, additional measures may be necessary, such as relocating the EUT or using a shielded location with a higher RF shielding effectiveness and filter attenuation.

12. Electric Diagram

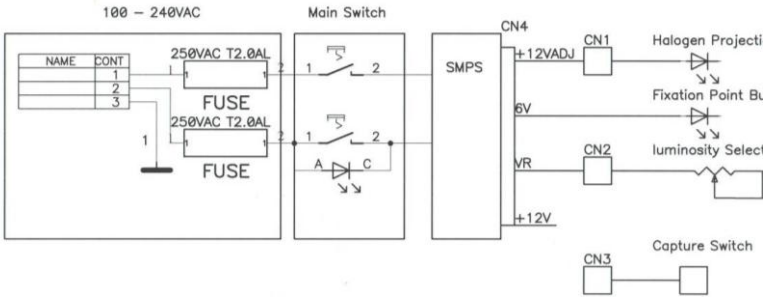

13. Technical Specifications

MICROSCOPE - HS-7500 (5x)	
Model name	Halogen: HS-7500(HLG) LED : HS-7500(LED)
Type	Galilean converging binocular
Magnification	5 positions rotation drum
Eyepiece	12.5x (Option 10x)
Total magnification	6x, 10x, 16x, 25x, 40x (12.5x eyepiece) 4.8x, 8x, 12.8x, 20x, 32x (10x eyepiece)
Real field of view	38.5, 24.0, 15.0, 9.0, 6.0 mm
Inter pupillary adjust	55-80 mm
SLIT ILLUMINATION	
Slit length	0.3 - 14 mm
Slit width	0.3 - 14 mm(continuous)
Slit projection	1.17x
Aperture diaphragms	0.3/2.5/3.5/7/10/14 mm
Filters	cobalt blue, red-free(green filter), gray and heat- absorption
Slit rotation	0˚~180˚ continuous
Angle of incidence	0˚~ 20˚
Free working distance	66 mm

BASE	
Vertical Movement	Min. 28mm
Longitudinal Movement	Min. 78mm.
Lateral Movement	Min. 98mm
Fine base Movement	Min. 10mm
Power supply	Halogen : 100-240V AC 50/60HZ 0.8-0.5A LED : 100-240V AC 50/60HZ 0.3-0.2A
Power consumption	Halogen : 48W (107VA) LED : 15W (40VA)
Instrument Voltage	12V DC
Halogen Projection bulb	Halogen : 12V 30W, LED : 10v 4.4W
Fixation point LED	3.4V 20mA

14. Service Information

How to contact service: If there are any problems with the equipment, please follow the steps below:

- First of all, refer to the 10. Maintenance and 11. Troubleshooting sections according to the problem that you are encountered. And then follow the suggested sequences.
- If the problem persists, please contact the local distributor in your province or country at first.
- Before calling to the local distributor, you'd better check these information such as Model and Serial Numbers. To do so, fill up the following table as soon as you purchase our product. You can look up these information at any time. The serial number is found on the back of this unit. The serial number is unique to this unit. You should retain this manual as a permanent record of your purchase. Please retain your purchase receipt as your proof of purchase.

Date of Purchase:	
Dealer's Name:	
Dealer Address:	
Dealer Phone No. :	
Model No.:	
Serial No.:	

- If you can't contact with your local distributor, you can directly get in touch with the service department of the HUVITZ using the phone number and the address written in the below table.

15. Particular Information

15.1. Relative spectral output graph

(1) Halogen Lamp

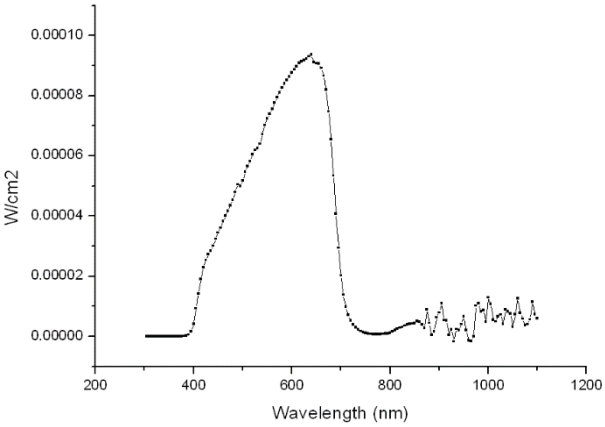

(2) Fixation Lamp

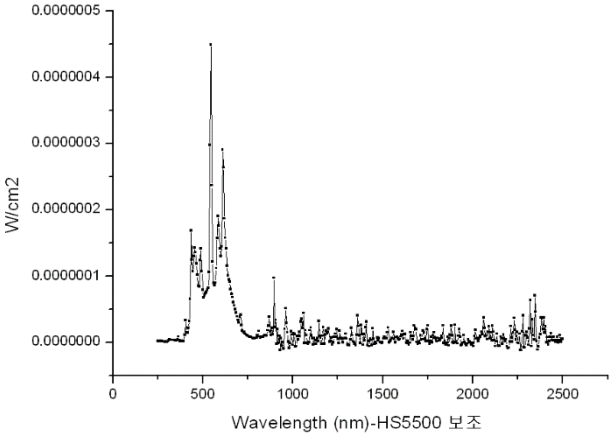

Note: this graph be shown for the beam after it exists the instrument, when the instrument is operating at maximum light intensity and maximum aperture.

⚠ CAUTION

"CAUTION – The light emitted from this instrument is potentially hazardous. The longer the duration of exposure, the greater the risk of ocular damage. Exposure to light from this instrument when operated at maximum output will exceed the safety guideline after _100seconds__
(e. g. 100seconds for source halogen lamp, 151057 seconds for fixation lamp,)."