ENG

HIS-5000U User Manual

HIS-5000U (Huvitz Imaging System)



Huvitz

IMPORTANT NOTICE

⚠ WARNING

Potential electromagnetic or other interference between medical equipment and other devices being operated together in the same environment may have an adverse effect on the function of medical equipment. Non-medical equipment which is not in compliance with the requirements of EN 60601-1 and EN 60601-1-2 should not be used together in the same environment as medical equipment.

Les interférences électromagnétiques ou autres potentielles entre l'équipement médical et d'autres dispositifs fonctionnant ensemble dans le même environnement peuvent avoir un effet néfaste sur la fonction de l'équipement médical. Les équipements non médicaux qui ne satisfont pas aux prescriptions des normes EN 60601-1 et EN 60601-1-2 ne devraient pas être utilisés dans le même environnement que les équipements médicaux.

This equipment has been tested and found to comply with the limits for medical devices in IEC 60601-1-2:2014. These limits are designed to provide reasonable protection against harmful interference in a typical medical installation

This product may malfunction due to electromagnetic waves caused by portable personal telephones, transceivers, radio-controlled toys, etc. Be sure to avoid having objects such as, which affect this product, brought near the product.

The information in this publication has been carefully checked and is believed to be entirely accurate at the time of publication. HUVITZ assumes no responsibility, however, for possible errors or omissions, or for any consequences resulting from the use of the information contained herein.

HUVITZ reserves the right to make changes in its products or product specifications at any time and without prior notice, and is not required to update this documentation to reflect such changes.

This manual is supplied with the CD.

(9000ENGZ101-F) (2024.05)

©2013 HUVITZ Co., Ltd.
38, Burim-ro 170beon-gil, Dongan-gu, Anyang-si, Gyeonggi-do, 14055
Republic of Korea

All rights are reserved.
Under copyright laws, this manual may not be copied, in whole or in part, without the prior written consent of HUVITZ Co., Ltd.

CONTENTS

1 INTRODUCTION 5
1.1 INDICATION FOR USE (INTENDED USE) 5
1.2 OUTLINE OF THE INSTRUMENT 5
1.3 CLASSIFICATION.....5
2 SAFETY INFORMATION 6
2.1 INTRODUCTION 6
2.2 SAFETY SYMBOLS.....7
2.3 ENVIRONMENT FACTORS.....9
2.4 SAFETY PRECAUTIONS 12
3 FEATURES & OPERATING CONDITION 15
3.1 BRIEF DESCRIPTION.....15
4 COMPONENT AND ACCESSO RIES 16
4.1 HIS-5000U (HAAG TYPE) FOR HS-5000(HS-7000) 16
4.2 HIS-5000U(ZEISS TYPE) FOR HS-5500 (HS-7500) 17
5 SYSTEM INSTALLATION 18
5.1 FOR HS-5000 (HS-7000) (HAAG TYPE) 18
5.2 FOR HS-5500(HS-7500)(ZEISS TYPE) 33
5.3 METHOD OF CAMERA FOCUSING AND DEPTH.....44
5.4 HOW TO USE THE CAMERA.....46
5.5 HOW TO INSTALL THE SOFTWARE 47
6 ORDINARY MAINTENANCE 47
6.1 CLEANING & DISINFECTION 48
6.2 DISPOSAL.....48

6.3 BEFORE CALLING FOR SERVICEMAN 48

7 EMC INFORMATION 49

7.1 MANUFACTURER ANNOUNCEMENT – ELECTROMAGNETIC WAVES TROUBLE.....49

7.2 MANUFACTURER ANNOUNCEMENT – ELECTROMAGNETIC WAVES TOLERANCE.....50

8 SPECIFICATION.....52

9 SERVICE INFORMATION.....54

1 INTRODUCTION

1.1 Indication for use (intended use)

- The HIS-5000U imaging system is intended for help observation and recording of eye using a slit lamp

1.2 Outline of the instrument

HIS-5000(U) (Huvitz Imaging System) is a digital imaging system for slit lamp applying high resolution digital camera and PC based imaging software to examine patient's eye, and manage slit lamp images with patient information. HIS-5000U package is composed of imaging software, C-mount typed camera module with CCD or CMOS camera, some accessories like IEEE-1394 or USB data link cable, auxiliary light cable, and a PCB board add-on for HS-5000 slit lamp developed by Huvitz.

HIS-5000N software supports networking function to share patient information and examination images between multiple PCs existing on the local network or internet via TCP/IP protocol. Also, this version use SQLite server solution as more reliable database, and includes additional HIS Server Management software to support to back up or restore patient and imaging data.

1.3 Classification

- Protection against electric shock: Not Applicable
- Protection against harmful ingress of water: Ordinary, IPX0
- Degree of safety in the presence of a flammable anesthetics mixture with air or with oxygen or with nitrous oxide: Not suitable for use in the presence of a flammable anesthetics mixture with air or with oxygen or with nitrous oxide.
- Mode of operation: Continuous
- Classification of installation and use: Fixed

⚠ CAUTION

Federal law restricts this device to sale by or on the order of a physician

La loi fédérale limite la vente de cet appareil à un médecin ou sur ordonnance médicale.

2 SAFETY INFORMATION

2.1 Introduction

Safety is everyone's responsibility. The safe use of this equipment is largely dependent upon the installer, user, operator, and maintainer. It is imperative that personnel study and become familiar with this entire manual before attempting to install use, clean, service or adjust this equipment and any associated accessories. It is paramount that the instructions contained in this manual are fully understood and followed to enhance safety to the patient and the user/operator. It is for this reason that the following safety notices have been placed appropriately within the text of this manual to highlight safety related information or information requiring special emphasis. All users, operators, and maintainers must be familiar with and pay particular attention to all Warnings and Cautions incorporated herein.

⚠ WARNING

"Warning" indicates the presence of a hazard that could result in severe personal injury, death or substantial property damage if ignored.

"Warning" indique la présence d'un danger pouvant entraîner des blessures graves, la mort ou des dommages matériels importants s'il est ignoré.

NOTE

"Note" contains instructional text for the installation, operation, or maintenance of the device and such instructional text is important as it is hazard-related.

"Note" décrit l'information pour l'installation, l'exploitation ou l'entretien de laquelle il est important mais lié au danger s'il n'est pas tenu compte.

⚠ CAUTION

"Caution" indicates the presence of a hazard that could result in minor injury, or property damaged if ignored.

"Caution" indique la présence d'un danger pouvant entraîner des blessures mineures ou des dommages matériels si ignoré.

2.2 Safety Symbols

The International Electro technical Commission (IEC) has established a set of symbols for medical electronic equipment which classify a connection or warn of any potential hazards. The classifications and symbols are shown below.
This applies only to the instrument that has the certification symbol printed explicitly on the product label or sticker.

	This symbol identifies a safety note. Ensure you understand the function of this control before using it. Control function is described in the appropriate User's or Service Manual. (Ce symbole identifie une note de sécurité. Assurez-vous de comprendre la fonction de ce contrôle avant de l'utiliser. La fonction de contrôle est décrite dans le manuel d'utilisation ou d'entretien approprié.)
	It indicates the year of manufacture and the manufacturer. (Il indique l'année de fabrication et le fabricant.)
	Manufacturer (Fabricant)
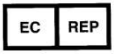	Authorized Representative in the European Community (Représentant autorisé dans la Communauté européenne)
	Temperature Limitation (Limitation de température)
	Keep DRY (Garder au sec)
	Consult instructions for use (Consulter les instructions d'utilisation)

	Refer to instruction manual/ booklet (Reportez-vous au manuel d'instructions / livret)
	WEEE mark Disposal of your old appliance When this crossed-out wheeled bin symbol is attached to a product it means the product is covered by the European Directive 2002/96/EC. All electrical and electronic products should be disposed of separately from the municipal waste stream via designated collection facilities appointed by the government or the local authorities. The correct disposal of your old appliance will help prevent potential negative consequences for the environment and human health. For more detailed information about disposal of your old appliance, please contact your city office, waste disposal service or the shop where you purchased the product. (Mise au rebut de votre ancien appareil Lorsque ce symbole de poubelle barrée est joint à un produit, cela signifie que le produit est couvert par la directive européenne 2002/96 / CE. Tous les produits électriques et électroniques doivent être éliminés séparément du flux des déchets municipaux via des installations de collecte désignées par le gouvernement ou les autorités locales. L'élimination correcte de votre ancien appareil aidera à prévenir les conséquences négatives potentielles sur l'environnement et la santé humaine. Pour plus d'informations sur l'élimination de votre ancien appareil, veuillez contacter votre mairie, le service d'élimination des déchets ou le magasin où vous avez acheté le produit.)

2.3 Environment factors

Avoid the following environments for operation or storage:

	A place where the equipment can be exposed to water. Do not operate the equipment with wet hand.
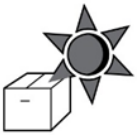	A place where the equipment can be exposed to direct sunlight.
	A place where the equipment can be exposed to direct ultraviolet.
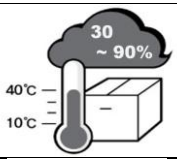	Place with severe temperature change (temperature for normal operation ranges from 10°C to 40°C while humidity level ranges from 30% to 90%).
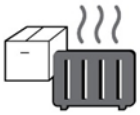	A place nearby a heating apparatus.
	A place where the equipment can be exposed to water. Do not operate the equipment with wet hand
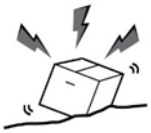	A place where the equipment can be exposed to excessive pressure or vibration.

	A place where the equipment can be exposed to chemical substances or flammable gas.
	Watch out for dust, especially metal pieces from entering the equipment.
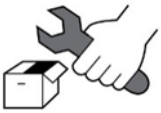	Do not disassemble the product. Huvitz will not be held responsible for any negligence regarding such action.
	Do not close the thermal ventilation outlet
	Do not connect the AC power adapter before all parts are fully assembled. It can lead to a malfunction.
	Always pull the power cord holding the plug and not the cord.

This instrument can withstand the following conditions:

1. Operation

- An ambient temperature range of 10℃ ~ 40℃ (50°F ~ 104°F)
- A relative humidity range of 30% ~ 90% (with non-condensing)
- An atmospheric pressure range of 800 ~ 1060hpa

2. Transportation

- An ambient temperature range of -40℃ ~ 70℃ (-40F ~ 158°F)
- A relative humidity range of 10% ~ 95%
- An atmosphere pressure range of 500 ~ 1060hpa

3. Storage

- An ambient temperature range of -10℃ ~ 55℃ (14°F ~ 131°F)
- A relative humidity range of 10% ~ 95% (with non-condensing)
- An atmosphere pressure range of 700 ~ 1060hpa

Avoid environments where the equipment is exposed to excessive shocks or vibrations.

2.4 Safety Precautions

This equipment has been developed and tested in conformity with domestic & international safety standards and regulations, which guarantees the high stability of this product. This guarantees a very high degree of safety for this device. The legislator expects us to inform the user expressively about the safety aspects in dealing with the device. The correct handling of this equipment is imperative for its safe operation. Therefore, please read carefully all instructions before switching on this device. For more detailed information, please contact our Customer Service Department or one of our authorized representatives.

1. This equipment must not be used (a) in an area that is in danger of explosions and (b) in the presence of flammable, explosive, or volatile solvent such as alcohol, benzene or similar chemicals.

2. The device should neither be kept nor installed in the place with high humidity. For the optimal operation, the humidity should be at the range of 30%~75%. The machine should not be exposed to the place where water splashes, drips or sprays. Do not place containers containing fluids, liquids, or gases on top of any electrical equipment or devices

3. The equipment must be operated only by, or under direct supervision of properly trained and qualified person/s.

4. Modifications of this equipment may only be carried out by Huvitz's service technicians or other authorized persons.

5. Customer maintenance of this equipment may only be performed as stated in the User's Manual and Service Manual. Any additional maintenance may only be performed by Huvitz's service technicians or other authorized persons.

6. The manufacturer is only responsible for effects on safety, reliability, and performance of this equipment when the following requirements are fulfilled:

(1) The electrical installation in the respective room corresponds to the specifications stated in this manual and (2) This equipment is used, operated and maintained according to this manual and Service Manual.

7. The manufacturer is not liable for damage caused by unauthorized tampering with the device(s). Such tampering will forfeit any rights to claim under warranty.

8. The equipment may only be used together with accessories supplied by Huvitz's. If the customer makes use of other accessories, use them only if there are usability under technical safety aspects has been proved and confirmed by Huvitz or the manufacturer of the accessory.

9. Only persons who have undergone proper training and instructions are authorized to install, use, operate, and maintain this equipment.

10. User's manual or service manual should be kept in the place where the persons in charge of operation and maintenance can access easily any time.

11. Do not force cable connections. If a cable does not connect easily, be sure that the connector is appropriate for the receptacle. If you cause any damage to a cable connector(s) or receptacle(s), let the damage(s) be repaired by an authorized service technician.

12. Please do not pull on any cable. Always hold on to the plug when disconnecting cables.

13. Before every operation, proceed with visual inspection on the equipment exterior to seek any mechanical damage(s) to ensure the proper functioning.

14. In case of any presence of smoke, spark or abnormal noise/smell from the machine, please power off immediately and pull out the plug.

15. IEC standard needs to be satisfied with in order to connect an outside device with input/output signal or other connector. (IT equipment is IEC 60950, and

electric equipment for medical use is IEC 60601). Moreover, all the systems need to satisfy the safety requirement, IEC 60601-1-1 when it comes to the electric system for medical use. Person who connects outside device with input/output signal or other connector has the obligation to take responsibility in accordance to the IEC60601-1-1. Contact local technician or distributor if you have doubts.

16. To avoid electrocution, this device must be connected to the supply power along with protective grounding.

17. Do not place at a difficult location when separating cable when it comes to the device's placement.

18. When you carry this product or If you want the product to be installed on another place, please call A/S center

3 FEATURES & OPERATING CONDITION

3.1 Brief Description

- This equipment is a camera image system for using mounted on a slit lamp.
- This equipment mounted on a slit lamp and can get a images and videos
- Simple dimensional measurements of the eye is possible with using the picture measure software

4 COMPONENT AND ACCESSO RIES

4.1 HIS-5000U (HAAG TYPE) For HS-5000(HS-7000)

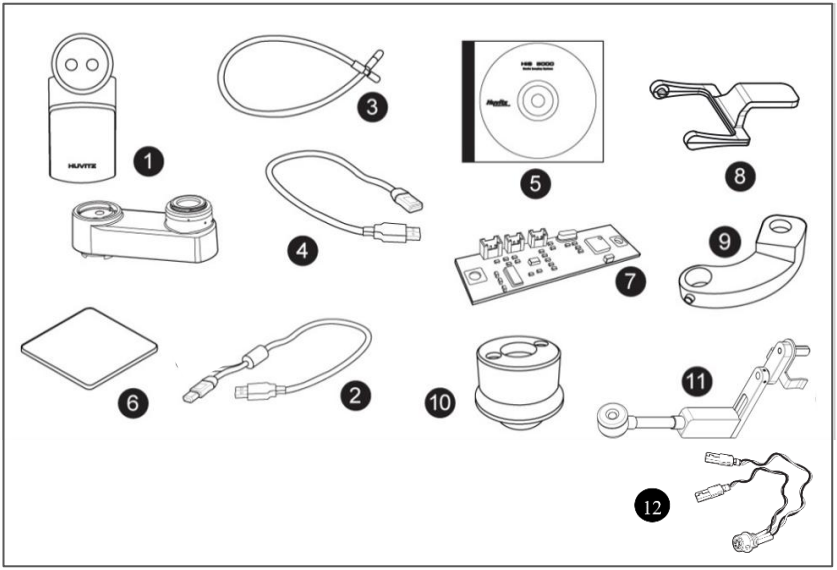

pic.1

(1) Camera Ass'y or DSLR Adapter
(2) Camera communication cable
(3) Auxiliary light cable
(4) USB cable
(5) Software CD
(6) Light sensor plate
(7) Light sensor PCB
(8) Scatter
(9) IMS Back Light Holder
(10) IMS Back Light Ass'y (Halogen or LED)
(11) IMS Back Light Type 3 (Option)
(12) Board Cable

4.2 HIS-5000U(ZEISS TYPE) for HS-5500 (HS-7500)

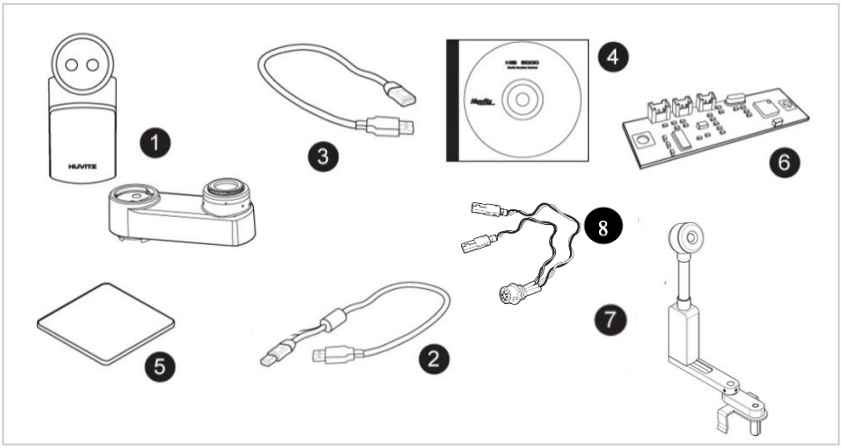

pic.2

(1) Camera Ass'y
(2) Camera communication cable
(3) USB Cable
(4) Software CD
(5) Light sensor plate
(6) Light sensor PCB
(7) IMS Back Light Type 3
(8) Board Cable

5 SYSTEM INSTALLATION

5.1 For HS-5000 (HS-7000) (HAAG TYPE)

The case where the HIS-5000U is combined in the Slit-lamp, HS-5000(HS-7000) the R/L sensor PCB or auxiliary light ass'y will become establishment. It will affix the camera module which is included consequently in the accessories and it will be able to establish the HIS-5000U. **(☞ GO TO STEP 11)**

The Case which will not be combined the Slit-lamp, HS-5000(HS-7000)
To install *HIS-5000U system,* perform the following steps:

Step 1. Disassemble the HS-5000(HS-7000).

It refers to Manual of the HS-5000(HS-7000) and after separating, the base together with the picture it turns over.

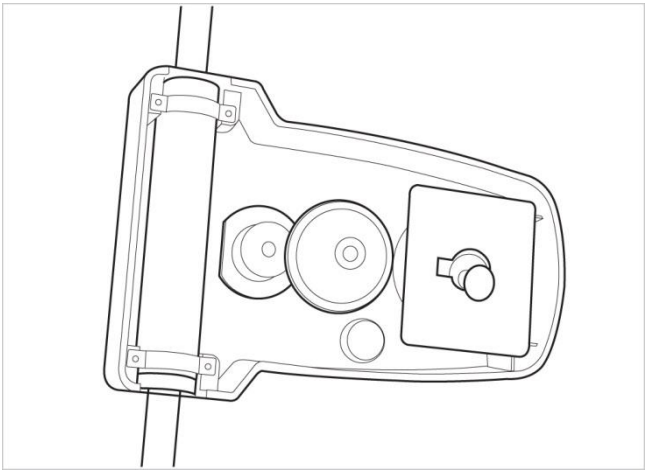

pic.3

Step 2. Combine Camera Socket

Combine Camera socket on a Body, as shown

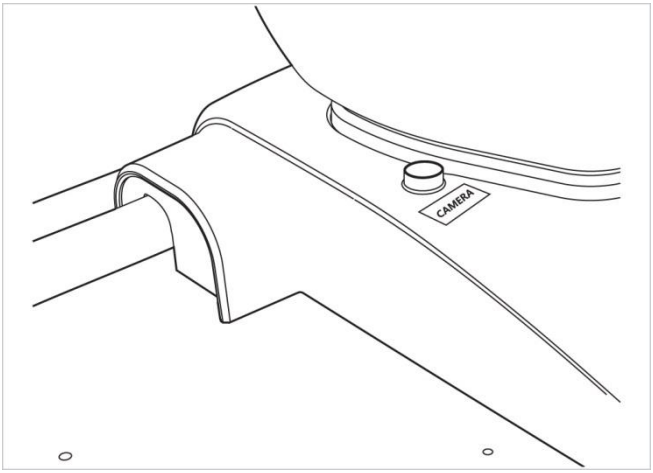

pic.4

Step 3. Combine Light sensor PCB.

It connects in the light sensor PCB socket and it affixes the PCB.

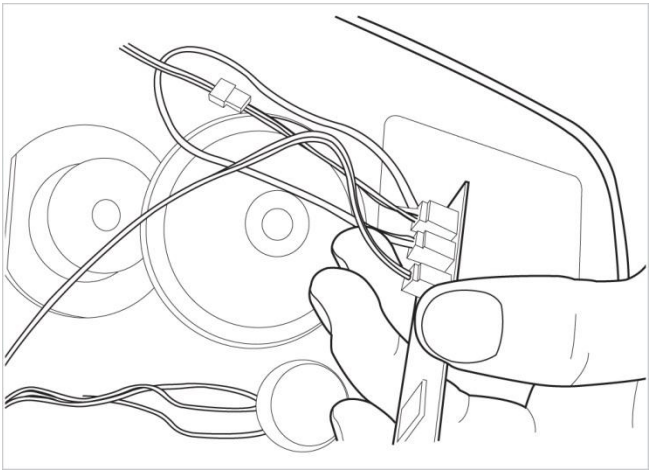

pic.5

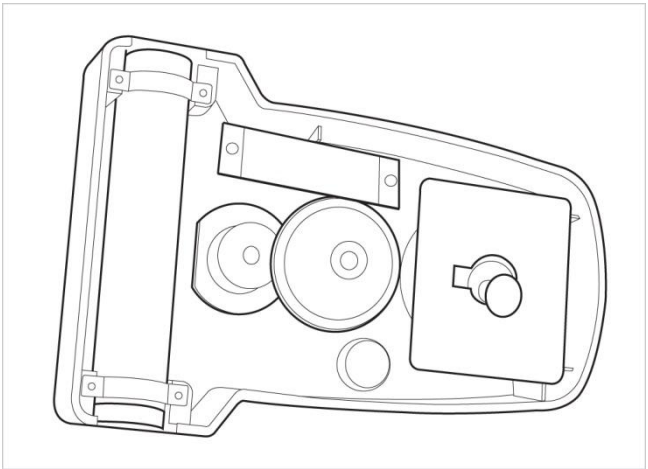

pic.6

Step 4. Combine Base cover.

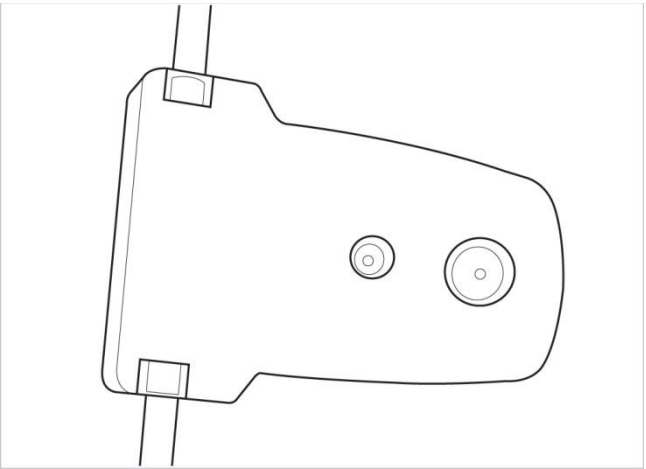

pic.7

Step 5. Affix Light sensor plate.

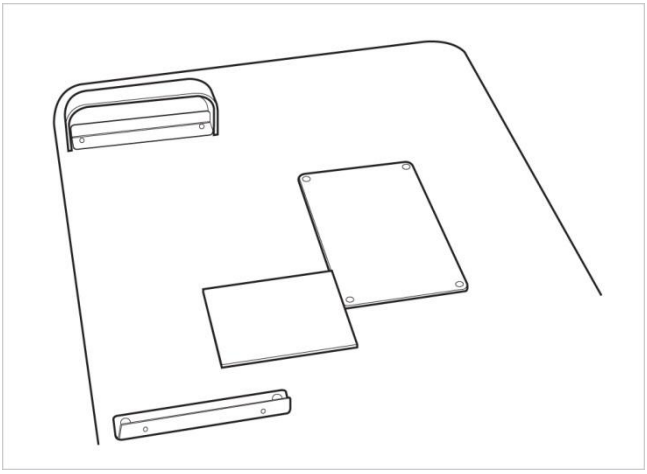

pic.8

Step 6. Affix Cable fixation holder.

It combines the HS-5000(HS-7000) and it attaches the cable fixation holder in microscope arm.

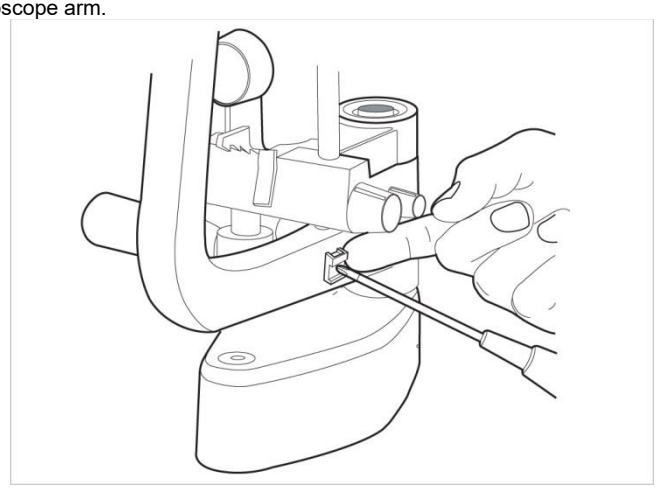

pic.9

Step 7. Combine Auxiliary light cable supporter.

It lifts the scaled ring and it affixes it fixes the auxiliary light cable supporter.

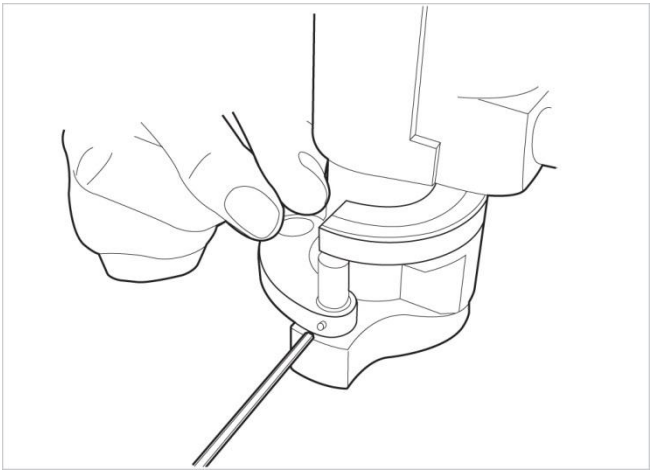

pic.10

Step 8. Disassemble lamp cover.

It separates the lamp cover and it separates the inner cover.



pic.11 Turn side screw and separate cover



pic.12 Turn top side screw (use 2.5mm wrench)

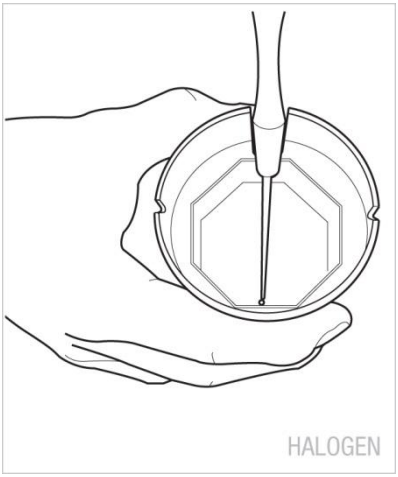

pic.13

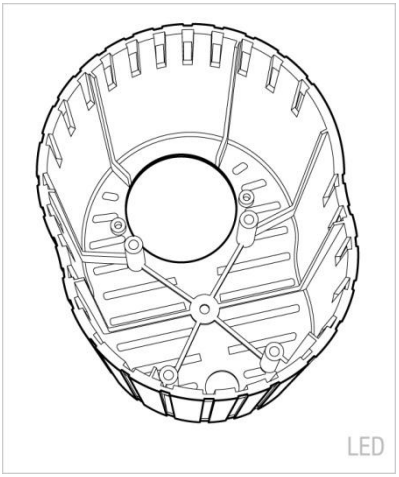

pic.14

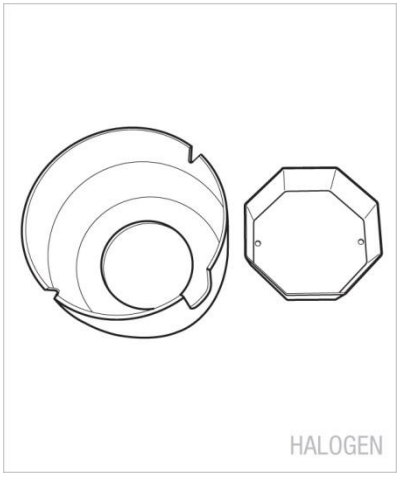

pic.15

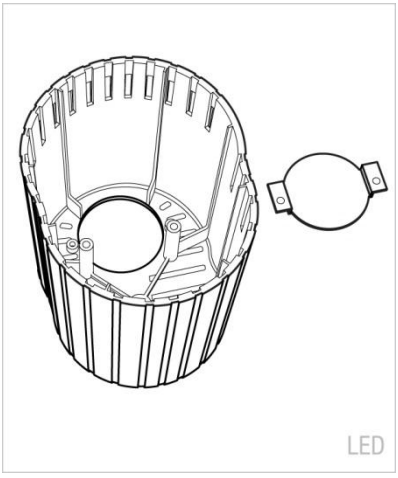

pic.16

Step 9. Disassemble light Ass'y.

It separates the light ass'y.

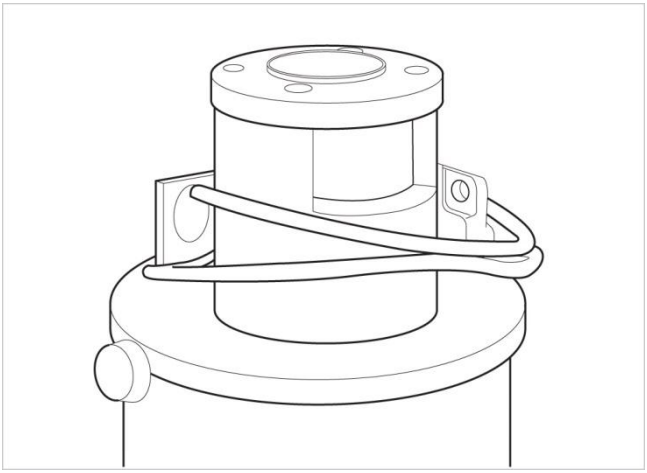

pic.17

Step 10. Combine Auxiliary light Ass'y.

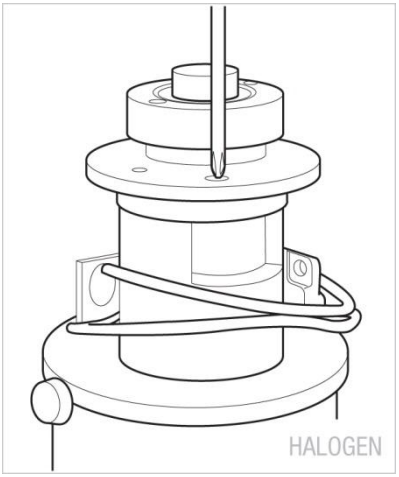

pic.18 It affixes the auxiliary light Ass'y

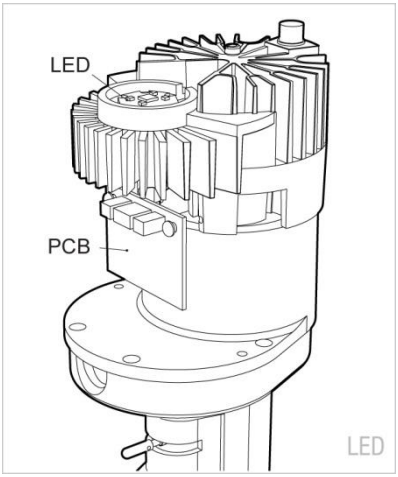

pic.19 It affixes the LED and PCB

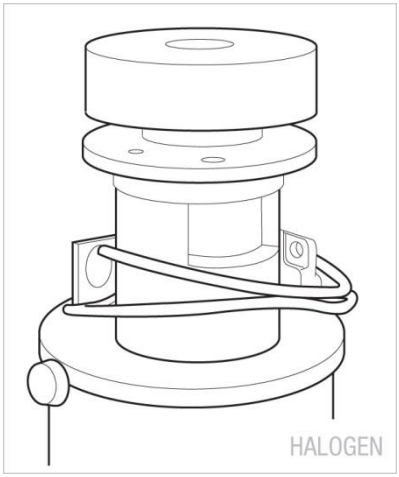

pic.20 Fix the module with screw

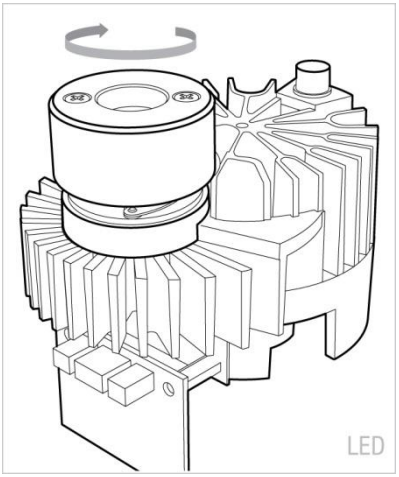

pic.21 Fix the module by turning

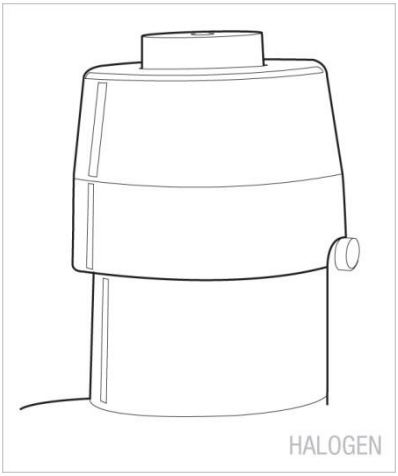

pic.22



pic.23

Step 11. Combine Scatter.

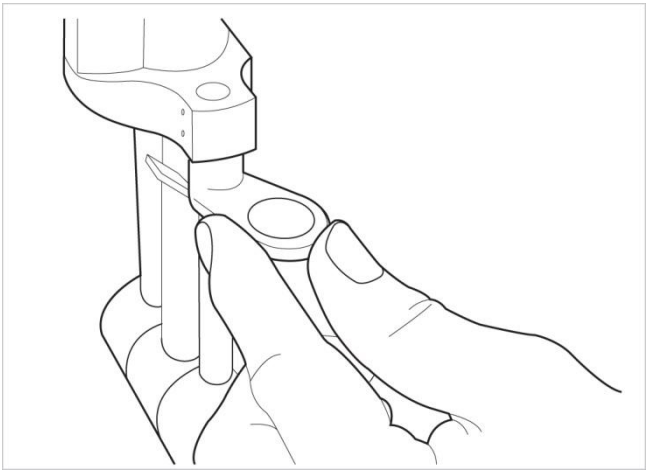

pic.24

Step 12. Combine Auxiliary light cable.

It combines the cable in auxiliary light Ass'y and supporter.

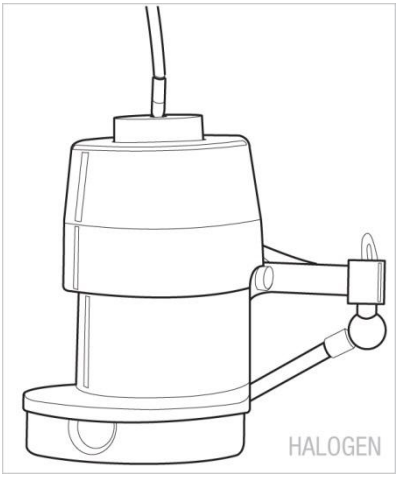

pic.25

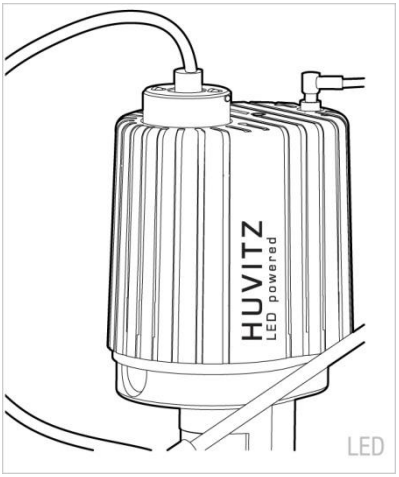

pic.26

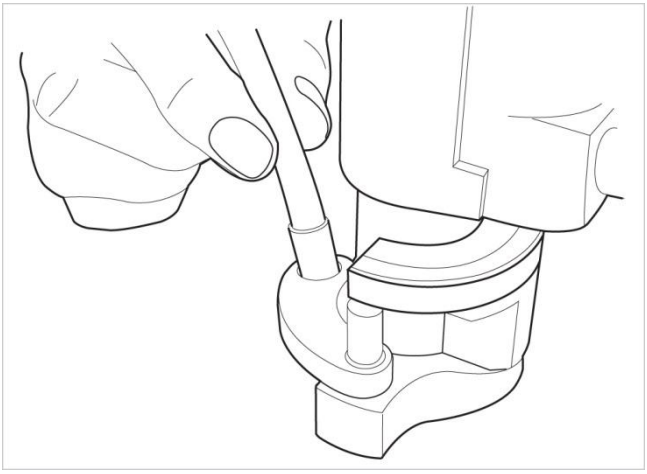

pic.27

Step 13. Combine Camera Ass'y.

The Microscope separates and after affixing a camera ass'y, it combines again.

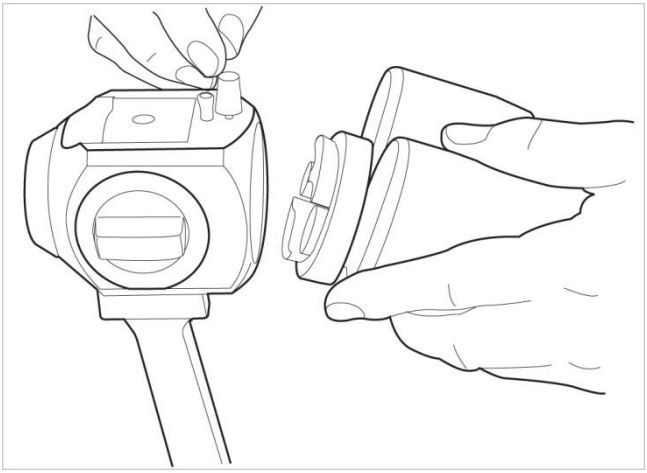

pic.28

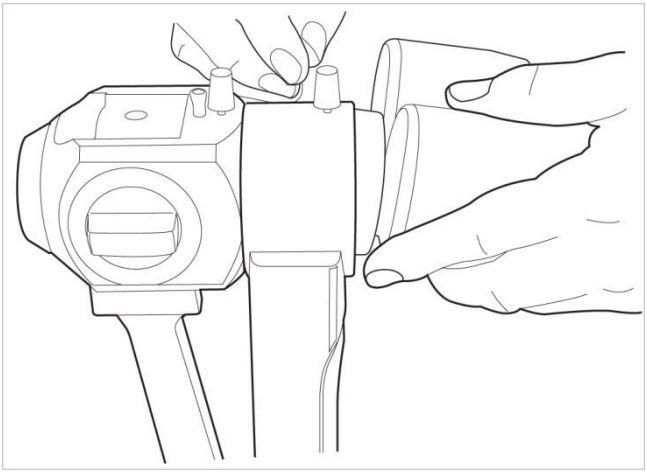

pic.29 HIS-5000U Camera

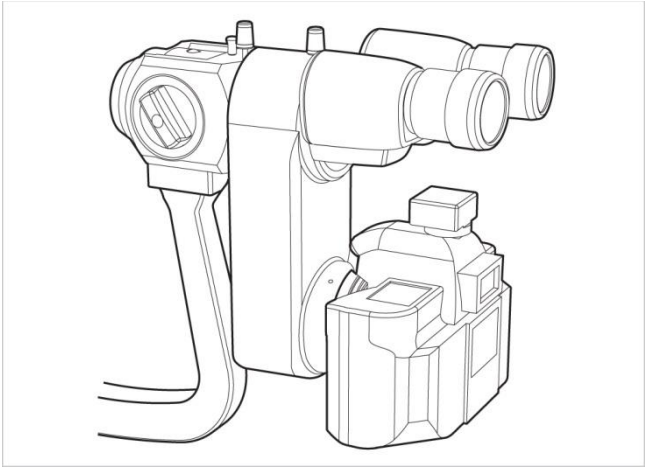

pic.30 DSLR Adapter

Step 14. Connect cable on the Camera Ass'y.

It connects the camera communication cable and the USB cable in camera ass'y.

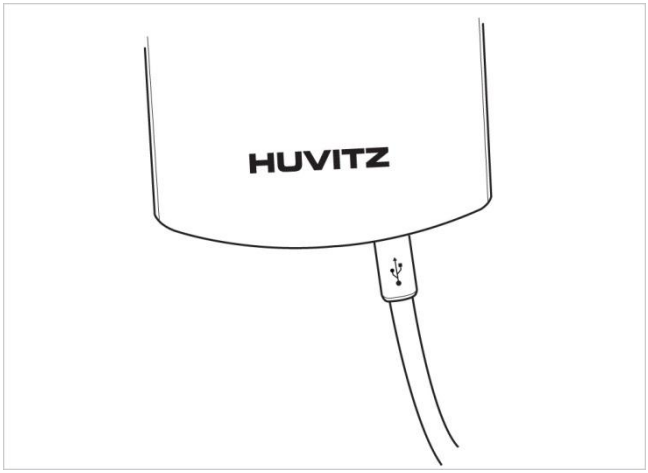

pic.31 HIS-5000U Camera

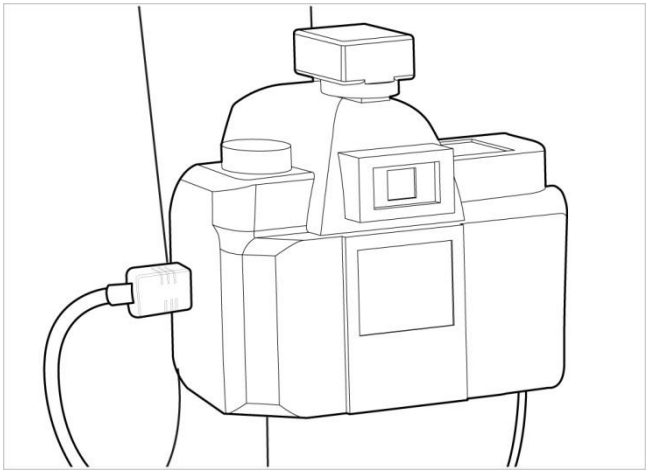

pic.32 DSLR Adapter

Step 15. Connect Camera communication cable.

It connects the camera communication cable in the base.

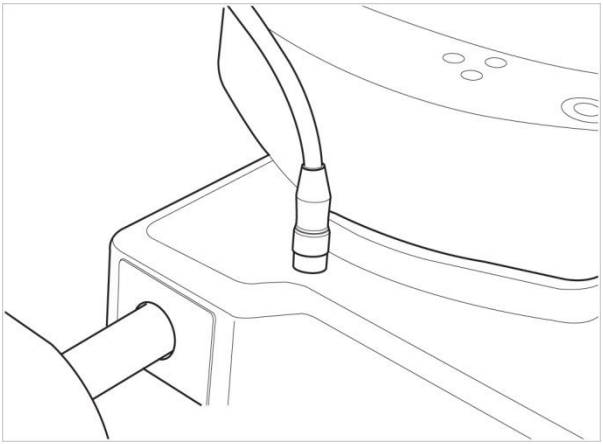

pic.33

Step 16. Fix the cable.

It fixes in the cable fixation holder and it does there not to be an effect in operation.

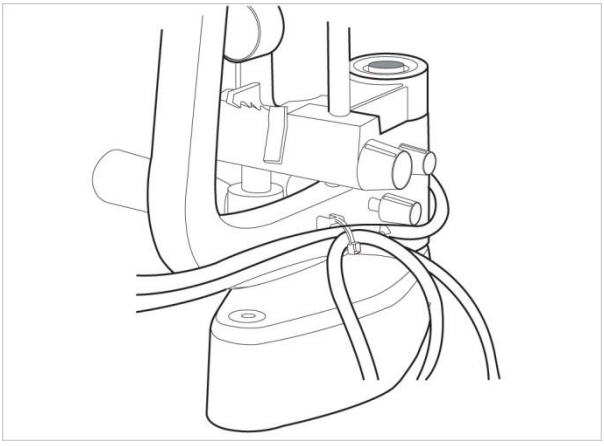

pic.34

Step 17. Connect the USB cable and PC.

Connect the USB on the Camera to USB of the PC, by using the long USB cable.

Step 18. Be sure the PC is turned off. Turn on the PC and turn on the Slit-lamp, HS-5000.(HS-7000)

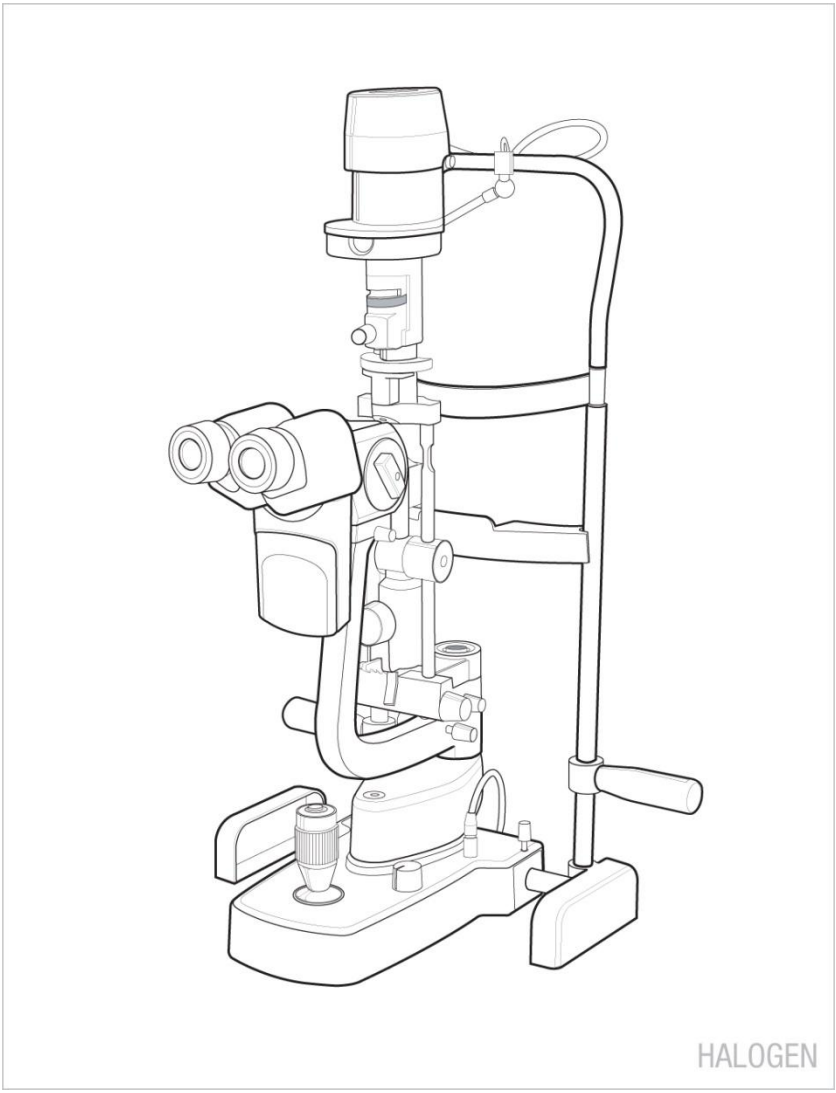

pic.35

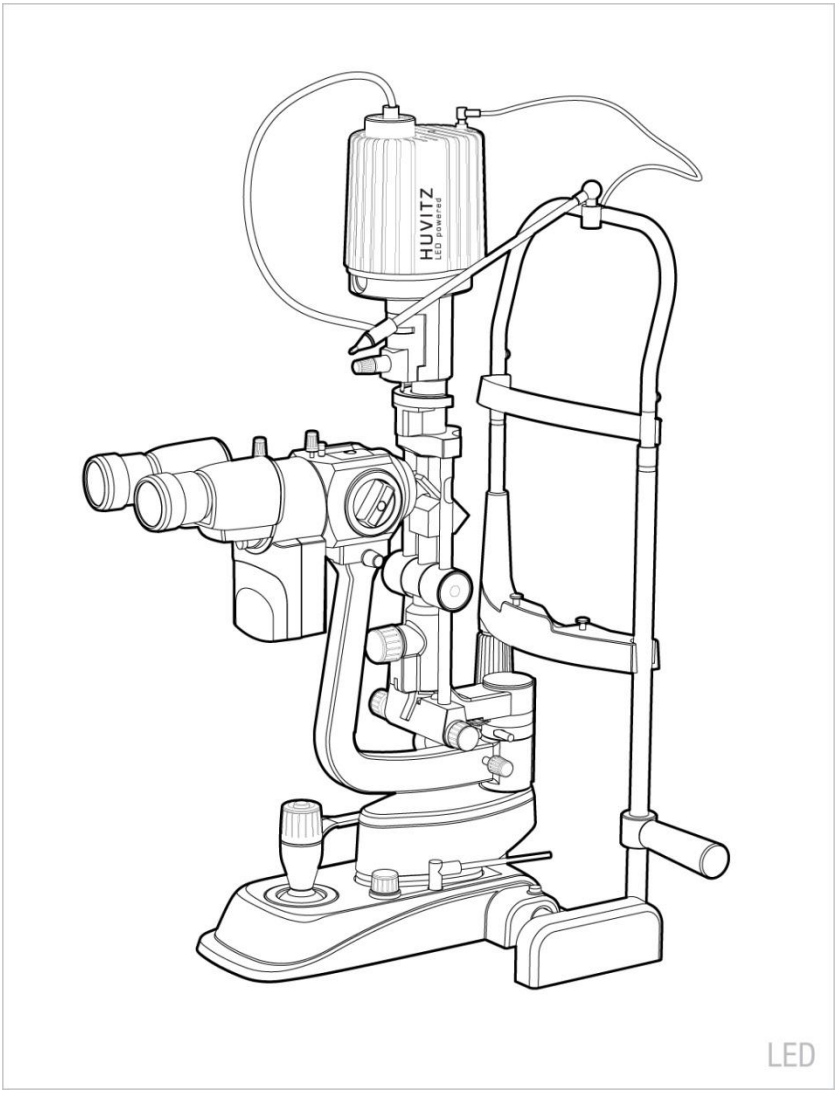

pic.36

5.2 For HS-5500(HS-7500)(ZEISS TYPE)

The case where the HIS-5000U is combined in the Slit-lamp, HS-5500(HS-7500) the R/L sensor PCB or auxiliary light ass'y will become establishment. It will affix the camera module which is included consequently in the accessories and it will be able to establish the HIS-5000U. . **(☞ GO TO STEP 11)**

The Case which will not be combined the Slit-lamp, HS-5500(HS-7500)
To install HIS-5000U system, perform the following steps:

Step 1. Disassemble the HS-5500(HS-7500).

It refers to Manual of the HS-5500(HS-7500) and after separating, the base together with the picture it turns over.

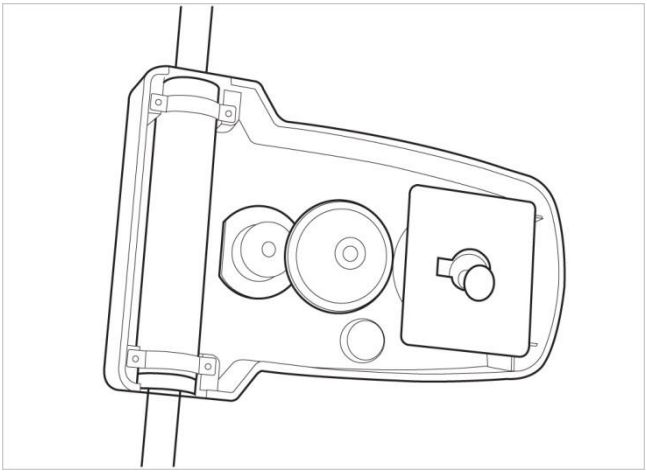

pic.37

Step 2. Assemble a camera socket

Assemble the camera socket on a body

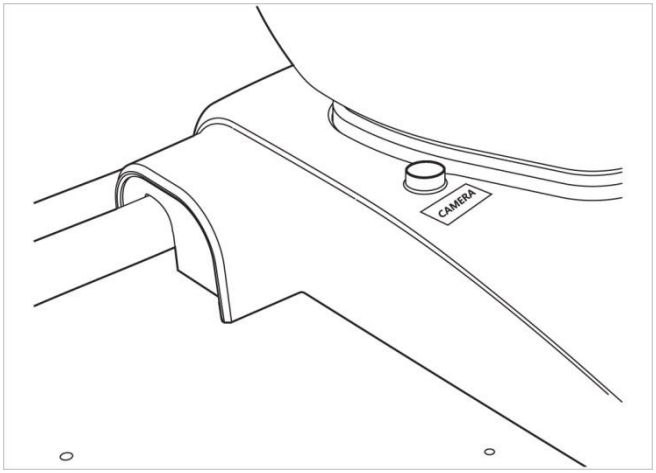

pic.38

Step 3. Combine Light sensor PCB.

It connects in the light sensor PCB socket and it affixes the PCB.

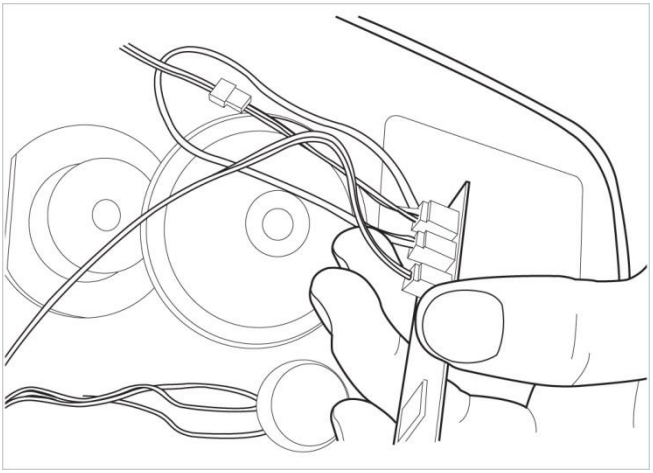

pic.39

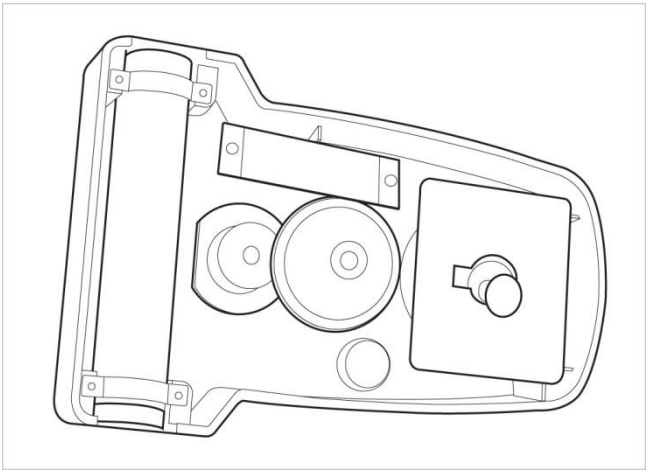

pic.40

Step 4. Combine Base cover.

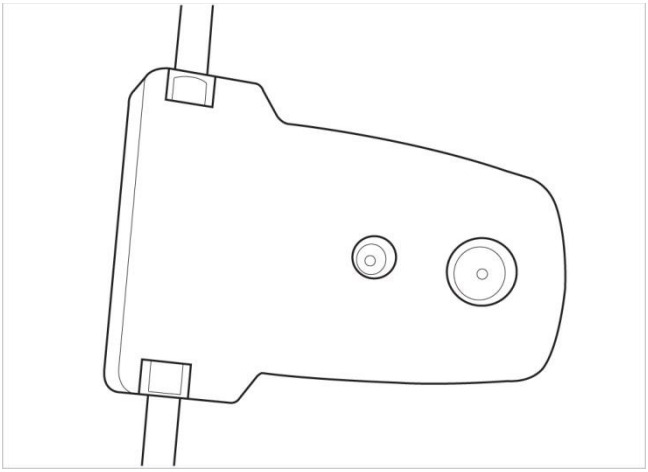

pic.41

Step 5. Affix Light sensor plate.

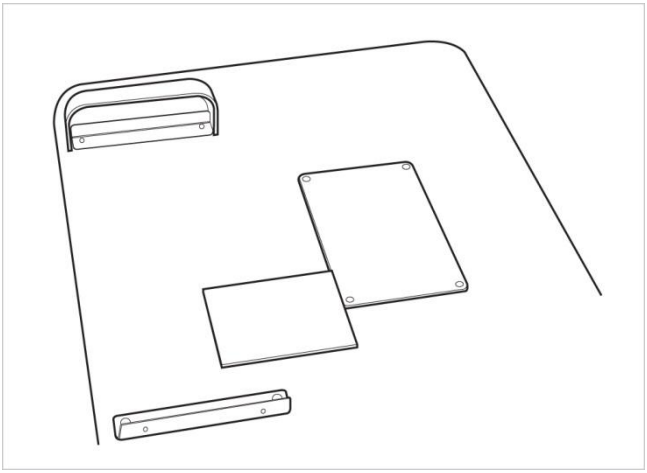

pic.42

Step 6. Affix Cable fixation holder.

It combines the HS-5500(HS-7500) and it attaches the cable fixation holder in microscope arm.

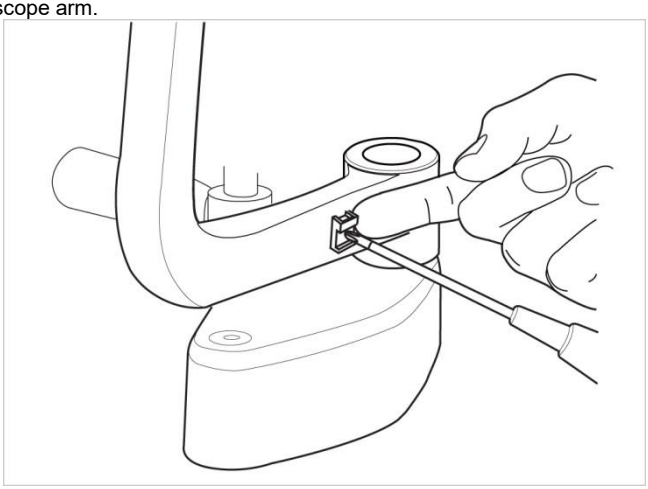

pic.43

Step 7. Combine Camera Ass'y.

The Microscope separates and after affixing a camera ass'y, it combines again

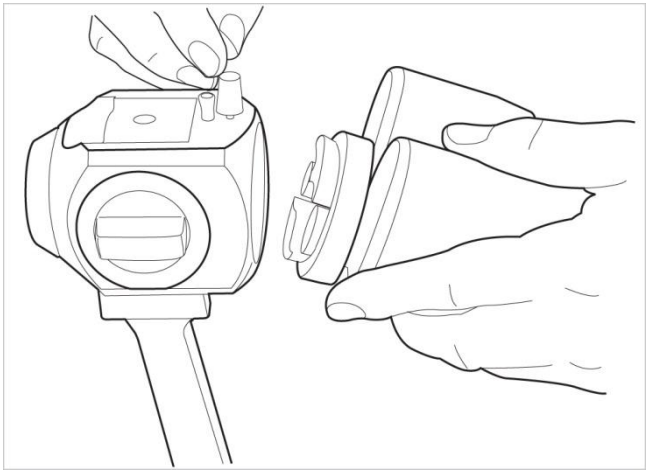

pic.44

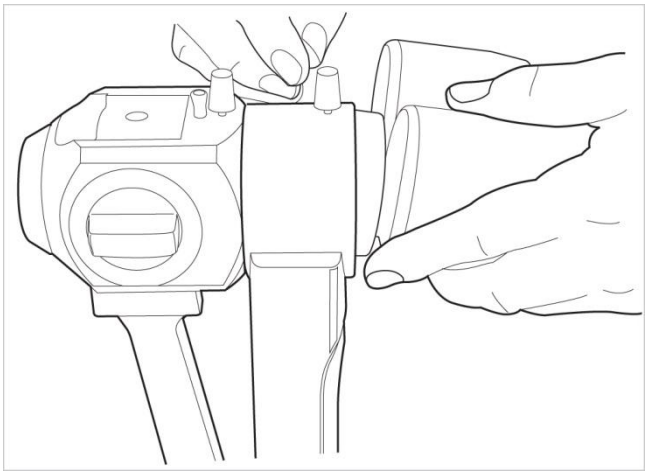

pic.45 HIS-5000U Camera



pic.46 DSLR Adapter

Step 8. Connect cable on the Camera Ass'y.

It connects the camera communication cable and the USB cable in camera ass'y.

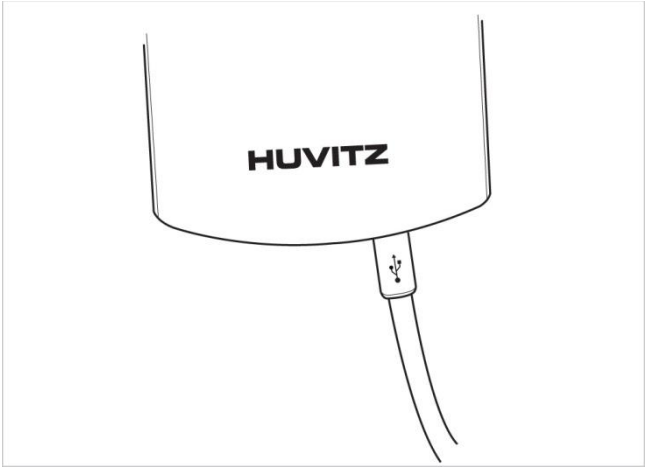

pic.47 HIS-5000U Camera

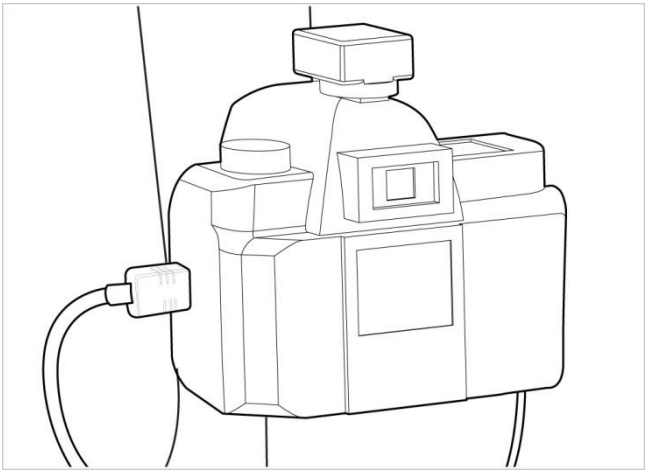

pic.48 DSLR Adapter

Step 9. Connect Camera communication cable.

It connects the camera communication cable in the base.

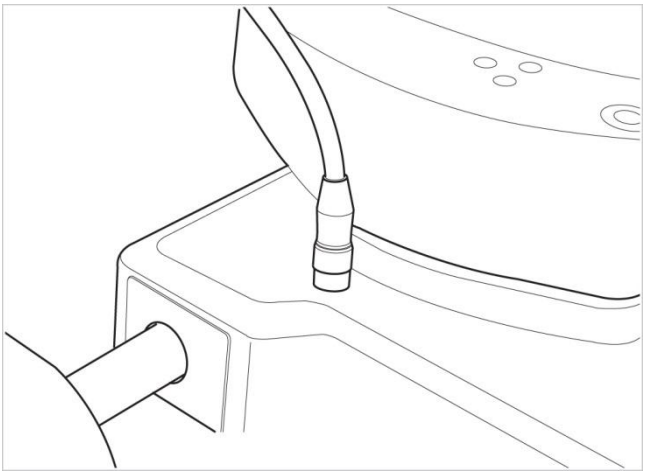

pic.49 HIS-5000U Camera

Step 10 Fix the cable.

It fixes in the cable fixation holder and it does there not to be an effect in operation.

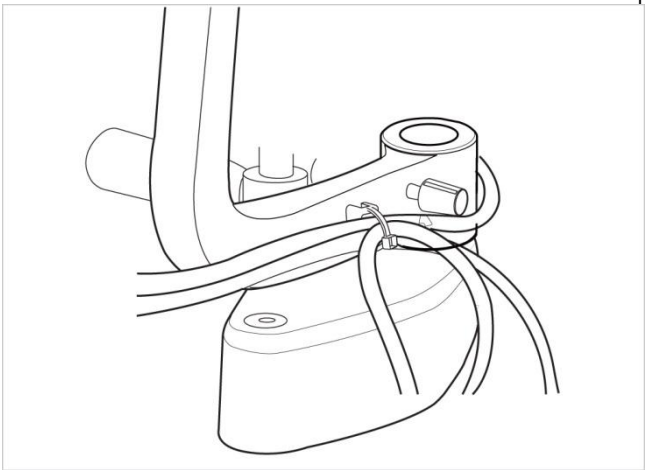

pic.50

Step 11 Combine Auxiliary light Ass'y

TYPE 1 Auxiliary light

It combines the auxiliary light Ass'y in HS-5500 (HS-7500)

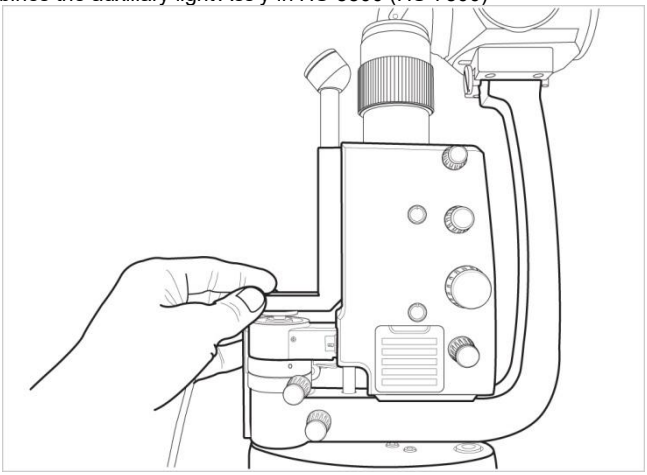

pic.51

TYPE 2 Auxiliary light

1) Disassemble the Fixing Lamp, as shown. (Use 2mm wrench)

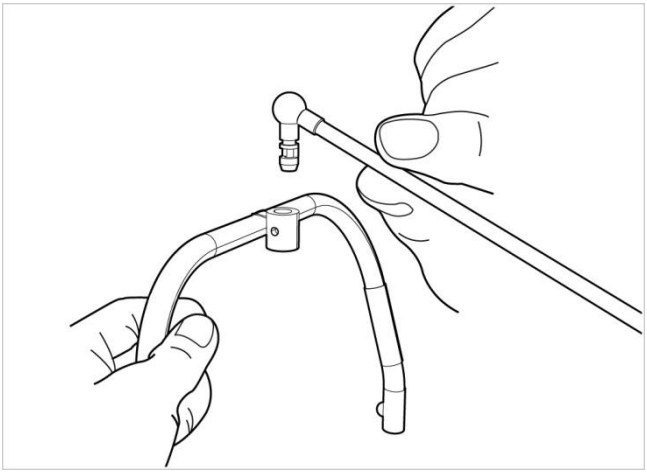

pic.52

2) Assemble TYPE 2 auxiliary and fix it with screw. (Use 2mm wrench)

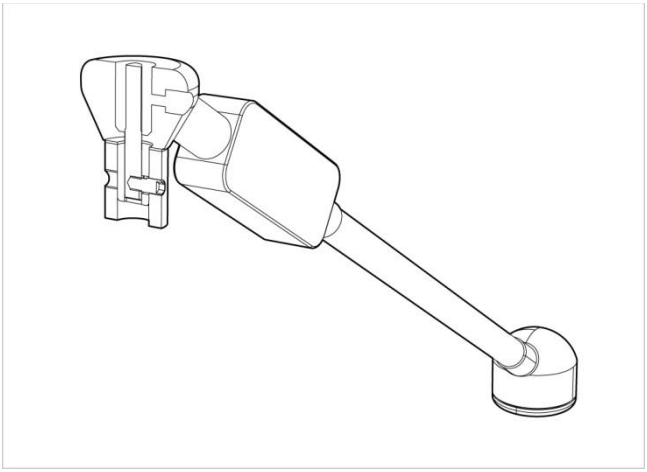

pic.53

3) Assemble Fixing Lamp and fix it with wrench screw, as shown. (Use 2mm wrench)

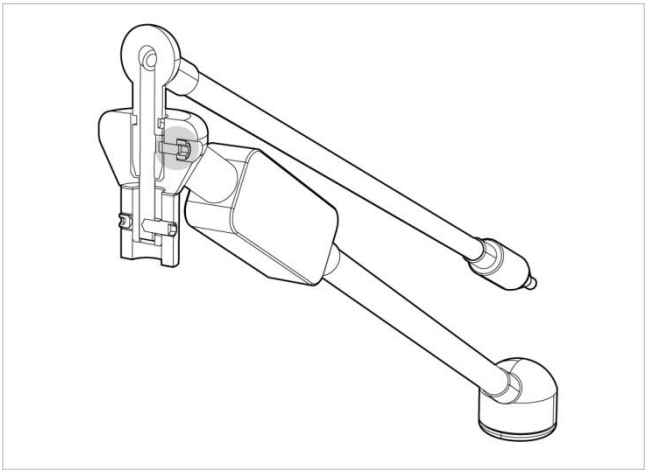

pic.54

Step 12. Connect Auxiliary light Ass'y cable.

It connects the Auxiliary light Ass'y cable in the SMPS

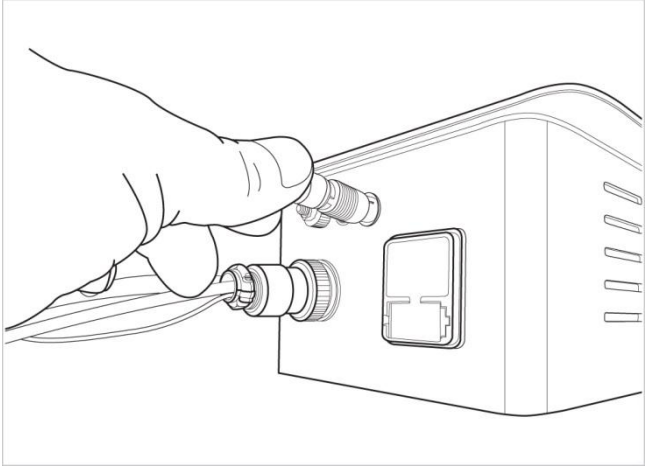

pic.55

Step 13. Connect the USB cable and PC.

Connect the USB connector on the Camera to the USB port on the rear panel of the PC, by using the long USB cable.

Step 14. Be sure the PC is turned off.

Turn on the PC and turn on the Slit-lamp, HS-5500(HS-7500).

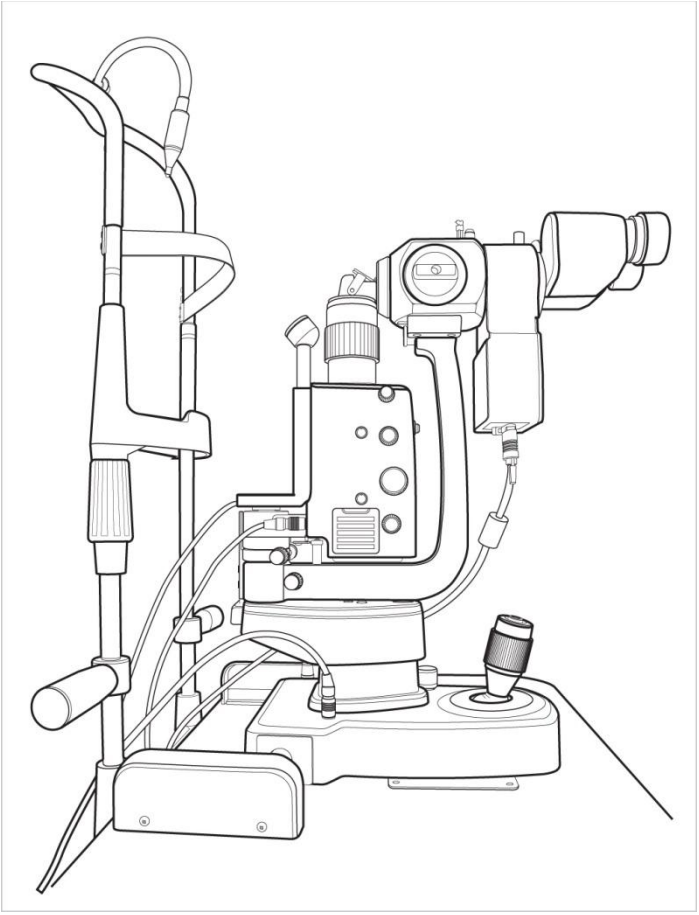

pic.56.

5.3 Method of Camera focusing and depth

After installing the camera, if it does not fit the image of the camera and eyepiece focus, the focus can be adjusted by following these steps.

Step 1. The focus of the eyepiece to match the target

By adjusting the eyepiece diopter to focus on the target

Step 2. Focus of the digital camera

With watching the video of the camera to focus on the target

⊙ **HIS-5000U CAMERA**

Loosen the lock using a 1.3mm hex wrench and focus on the target to using a one-party drivers.

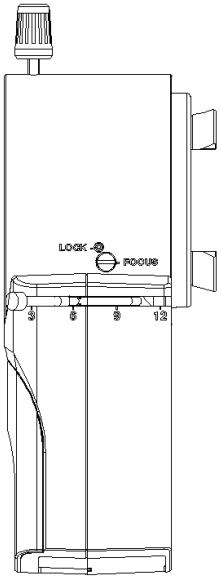

pic.57 HIS-5000U Camera

⊙ **DSLR Adapter**

Using a 1.5mm hex wrench to loosen the three bolt and focus by turning the ring back and forth.

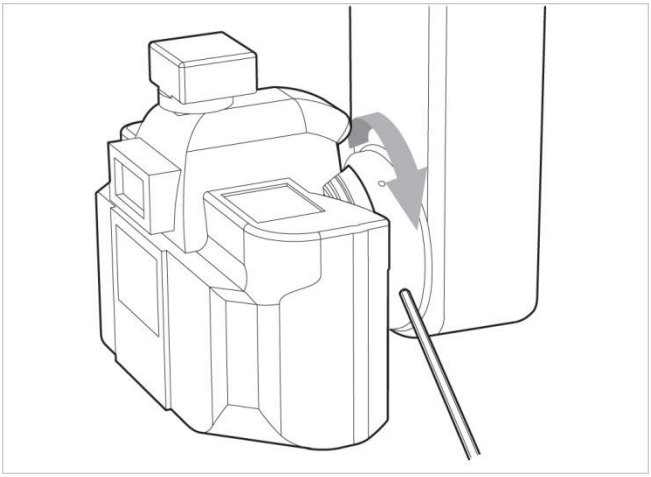

pic.58

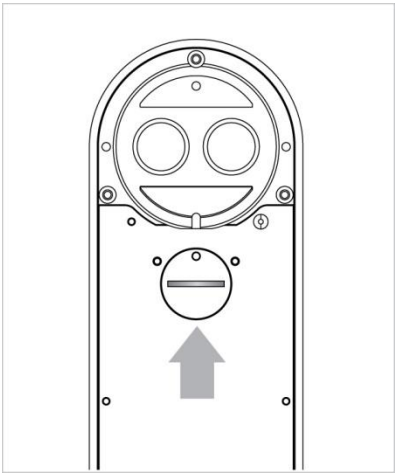

Use a coin to turn left and right the ring

pic.59

5.4 How to use the camera

- **HIS-5000U(5.0M) Camera handle function.**

1 Observer and camera switch handle
Turning toward the eye shape, 100% of the light comes in with the eye.
Turning towards the camera shape, the light is separated by camera and eye.

2 Aperture control knob
The size of the aperture can be adjusted by pushing or pulling.
O - Direction is aperture open
● - Direction is aperture closed

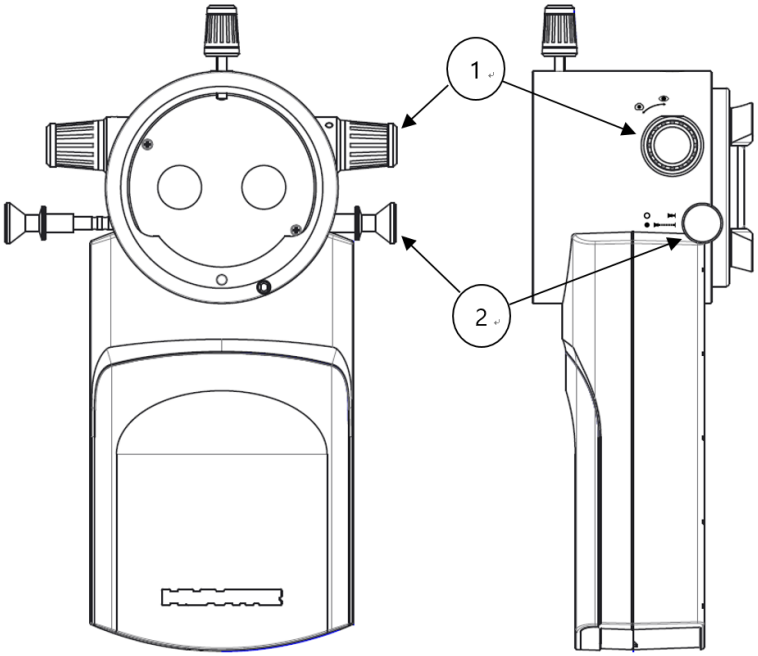

pic.60

5.5 How to install the software

Please reference the HIS-5000U software manual

⚠ WARNING

-Only use medically approved PC or operate via a medically approved isolation transformer.
-Auxiliary units on the PC(e.g. printer, monitor) must be operated through an isolation transformer.
-Ethernet may only be used through a galvanic isolation in accordance with EN60601-1

-Utilisez uniquement un ordinateur agréé médicalement ou utilisez un transformateur d'isolement médicalement agréé.
-Les unités auxiliaires sur le PC (par exemple, une imprimante, un moniteur) doivent fonctionner via un transformateur d'isolation.
-Ethernet ne peut être utilisé que par le biais d'une isolation galvanique conforme à EN60601-1

6 ORDINARY MAINTENANCE

NOTE

Don't touch any other parts of the glass tube with bare fingers.
Fingerprints, if any, must be wiped off from the glass tube with alcohol

Ne touchez aucune autre partie du tube de verre avec les doigts nus. Les empr eintes digitales, le cas échéant, doivent être effacées du tube de verre avec de l'alcool.

6.1 Cleaning & Disinfection

- To keep the device clean, apply clinical alcohol and cidex or cidex plus on a soft cloth and scrub the body and the probe once a month. Do not use lacquer, thinner, ethylene, or the oxidizing substance.

- If the instrument is not in use, dust must be kept away by covering the instrument. Dust accumulating during the functioning of the instrument must be periodically removed with a very soft cloth or with a small pump.

- As polishing the parts of lens or glass, get rid of dusts on the surface of lens with air tube and use a dry cloth.

6.2 Disposal

- To dispose the instrument, accessories, and components, follow local governing ordinances and recycling plans regarding disposal or recycling of instrument or device components.

- When disposing packing materials, sort them by the materials and follow local governing ordinances and recycling plans.

6.3 Before calling for serviceman

- The focus of the image does not match the observed system.

- The target mounted on the slit lamp and adjusting the diopter of the eyepiece focus on target
- The camera to focus on target (reference. focus adjustment method 5.3),
- If you have still experiencing problems, contact the dealer where you purchased.

- The view image does not appear.

- Please check camera and computer cables are properly plugged in again
- Verify the computer camera driver is properly installed

- check the selected camera is right on the HIS-5000 program (See software manual)

- Pressing the button on the joystick does not capture images.

-On your computer, make sure that the joystick driver is properly installed

-Joystick in the HIS-5000 program to verify that the serial port is properly selected.

-(See the software manual. Usually at the bottom of the software on the COM port is a joystick port.)

INFORMATION

To ensure that the system works properly, Huvitz recommends the use of a highly efficient desktop computer instead of a laptop.

Pour garantir le bon fonctionnement du système, Huvitz recommande l'utilisation d'un ordinateur de bureau hautement efficace au lieu d'un ordinateur portable.

7 EMC INFORMATION

7.1 Manufacturer announcement – electromagnetic waves trouble

Electromagnetic waves trouble	
HIS-5000U should be used in the below mentioned electromagnetic wave environment. HIS-5000U purchaser or user needs to confirm whether HIS-5000U is used in this type of environment.	
Trouble test	**Question of appropriateness**
RF emissions CISPR 11	Group 1
RF emissions CISPR 11	Class B
Harmonic emissions IEC 61000-3-2	Class A
Voltage fluctuations/flicker IEC 61000-3-3	Complies

7.2 Manufacturer announcement – electromagnetic waves tolerance

electromagnetic waves tolerance		
HIS-5000U is to be used in the below designated electromagnetic wave environment. HIS-5000U customer and user need to guarantee that the HIS-5000U will be used in this type of environment.		
Tolerance test	**IEC 60601 test level**	**Appropriateness level**
Electrostatic discharge(ESD) IEC 61000 - 4 - 2	contact ±8 kV in the air ±15 kV	contact ±8 kV in the air ±15 kV
Electric rapid transients/bust IEC 61000 - 4 - 4	power supplying line ±2 kV input/output line ±1 kV	power supplying line ±2 kV input/output line ±1 kV
Surge IEC 61000 - 4 - 5	between lines ±1 kV between line and grounding ±2 kV	differential mode ±1 kV common mode ±2 kV
Voltage dip, instantaneous interruption, voltage fluctuation at the power input line IEC 61000 - 4 - 11	For 0.5 cycle < 5 %*UT*(*UT's* > 95 % decrease) For 5 cycle 40 %*UT*(*UT's* 60 % decrease) For 25 cycle 70 %*UT*(*UT's* 30 % decrease) For 5 seconds < 5 % *UT*(*UT's* > 95 % decrease)	For 0.5 cycle < 5 %*UT*(*UT's* > 95 % decrease) For 5 cycle, 40 % *UT*(*UT's* 60 % decrease) For 25 cycle, 70 %*UT*(*UT's* 30 % decrease) For 5 seconds, < 5 % *UT*(*UT's* > 95 % decrease)
Power frequency magnetic field (50/60 Hz) IEC 61000 - 4 - 8	30 A/m	30 A/m
Other *U*T is the a.c. power voltage for before approving the test level.		

⚠ WARNING

Avoid damages due to high electrostatic discharges (ESD). Electrostatic discharges with voltages exceeding 8kV to some certain parts of the slit lamp like joystick or metallic parts on the instrument base may influence the instrument.
-The communication between camera module and PC could be interrupted, which would require a restart of the HIS software or a restart of the operating system.

Évitez les dommages dus aux décharges électrostatiques élevées (ESD). Les décharges électrostatiques avec une tension supérieure à 8 kV sur certaines parties de la lampe à fente, telles que les manettes de jeu ou les pièces métalliques situées sur la base de l'instrument, peuvent influencer l'instrument.
- communication entre le module de caméra et le PC pourrait être interrompue, ce qui nécessiterait un redémarrage du logiciel HIS ou du système d'exploitation.

Electromagnetic waves tolerance		
HIS-5000U is to be used in the below mentioned electromagnetic wave environment. HIS-5000U purchaser or user needs to confirm whether HIS-5000U issued at this environment.		
Tolerance test	**IEC 60601 test conditions**	**Appropriateness level**
Conductivity RF electromagnetic field IEC 61000 - 4 - 6	3 Vrms 150 kHz~80 MHz	3 Vrms
Radioactivity RF electromagnetic field tolerance IEC 61000 - 4 - 3	10 V/m 80 MHz~2.7 GHz scope	10 V/m

8 SPECIFICATION

- **HIS-5000U (10.0M),(5.0M),(1.4M)**

DIGITAL CAMERA	HIS-5000U(10.0M)	HIS-5000U(5.0M)	HIS-5000U(1.4M)
Size (except knob)	157x71x58 mm (137x71x58 mm)	192x116x66 mm (172x78x66 mm)	157x71x58 mm (137x71x58 mm)
Image sensor	1/2" CMOS	1" CMOS	1/2" CMOS
Image size	up to 3840 x 2748 pixels	up to 2592 x 2048 pixels	up to 1280 x 1024 pixels
Cell size	1.67 ㎛ X1.67 ㎛	4.8 ㎛ x 4.8 ㎛	4.65 ㎛ x 4.65 ㎛
Transmit method	USB 2.0	USB 3.0	USB 2.0
Transmit speed	480Mbps	5.0 Gbps	480Mbps
Frame rate	Maximum 30fps	Maximum 30fps	Maximum 15fps
Lens mount	C-Mount	C-Mount	C-Mount
Power consumption	5VDC, 2.5W	5VDC, 3.5W	5VDC, 2.5W

- **HIS-5000U (DSLR)**

- Support Canon DSLR camera - EF(EOS) (Flange Back : 44mm)
- Recommendation Canon DSLR – EOS600D, 650D, 700D, 60D
- Size(except knob) : 218x76x94mm

- **System Requirements**

Hardware and Software suggested requirements		
	Minimum Requirements	**Recommended**
Processor	Intel® Core™ i3(2.4GHz over)	Intel® Core™ i5(3G4Hz over)
RAM	Over 2GB recommended	Over 4GB recommended
Video Card	On board graphics chip(PCI/PCIe graphics card with DirectDraw support DirectX 9.0	On board graphics chip(PCI/PCIe graphics card with DirectDraw support DirectX 9.0 0 or Higher Recommended
O/S	Windows 7 SP1, 8, 10, 11	Windows 7 SP1, 8, 10, 11
Interface	USB2.0, USB3.0 (depending on camera model)	USB2.0, USB3.0 (depending on camera model)
Monitor Resolution	min. 1920x1080	1920x1080

9 SERVICE INFORMATION

How to contact service: If there are any problems with the equipment, please follow the steps below:

- If the problem generates, please contact the local distributor in your province or country at first.
- Before calling to the local distributor, you'd better check these information such as Model and Serial Numbers. To do so, fill up the following table as soon as you purchase our product. You can look up these information at any time. The serial number is found on the back of this unit. The serial number is unique to this unit. You should retain this manual as a permanent record of your purchase. Please retain your purchase receipt as your proof of purchase.

Date of Purchase: _____

Dealer's Name: _____

Dealer Address: _____

Dealer Phone No. : _____

Model No.: _____

Serial No.: _____