ENG

Huvitz

AUTO REF-TOPOGRAPHER

HRKT-1

USER MANUAL

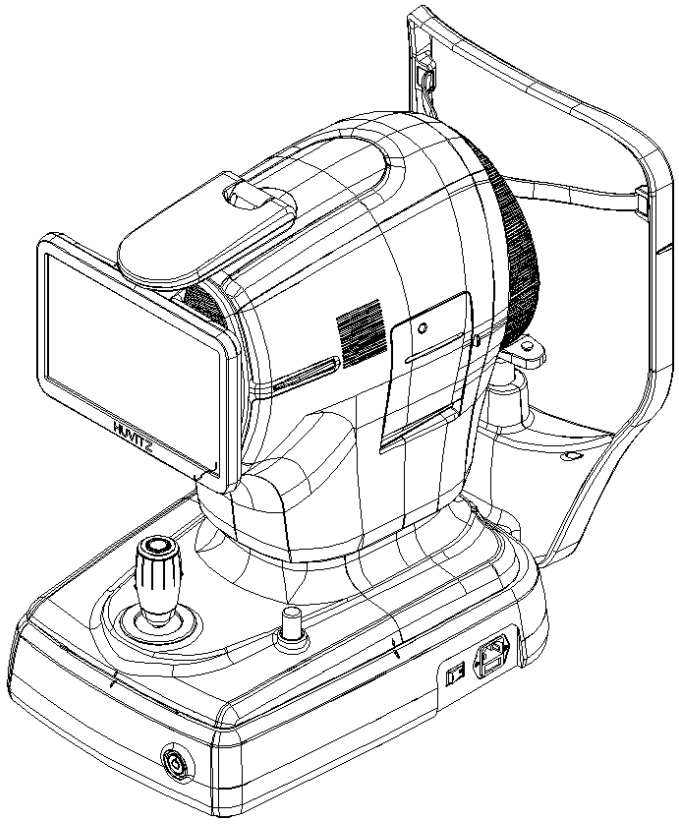

IMPORTANT NOTICE

Electromagnetic waves caused by devices such as mobile phones, transceivers, and radio-controlled toys may lead to malfunctions of this product. Please keep objects that would affect the product away from it.

The information in this user manual has been carefully checked, and is believed to be entirely accurate at the time of publication. However, HUVITZ assumes no responsibility for any potential errors or omissions resulting from the use of the information contained in this manual.

HUVITZ reserves the right to make changes to this product or its specifications at any time without particular notice and is not required to update this documentation to reflect such changes.

■ Revision History

Revision	Date	Approval	Description
A	2025.09.16	김 창 성	First issued
B			
C			

9000ENG0141-A
(2025/09/16)

© 2021 HUVITZ Co., Ltd.
38, Burim-ro 170beon-gil, Dongan-gu, Anyang-si, Gyeonggi-do, 14055, Republic of Korea

All rights reserved.
Under copyright laws, this manual may not be copied, in whole or in part, without the prior written consent of HUVITZ Co., Ltd.

CONTENTS

SAFETY PRECAUTIONS 4

1.1. Overview 4

Symbol Information 5

2.1. Usage Precautions 8
2.2. Environmental Considerations 11
2.3. Safety Warnings 13
2.4. Safety Cautions 18

INTRODUCTION 19

3.1. System Outline 19
3.2. Intended Use 19
3.3. Classifications 19
3.4. Contraindications 19
3.5. Patient Requirements 20
3.6. Operating Principles 20
3.7. Applied Standard List 20

SYSTEM OVERVIEWtin 21

4.1. Configuration and Functions 21
4.2. Main Body Screen Description 23

INSTALLATION PROCEDURE 43

5.1. System Installation 43

Operation 46

6.1. Software 46
6.2. SETUP Mode 48
6.3. DICOM SETUP Mode 53
6.4. Device Inspection 56
6.5. General Operation 56
6.6. MAINTENANCE 61
6.6.1. After operation 61
6.6.2. Cleaning and Instrument Protection 62
6.6.3. Replacement of consumables and fuse 63
6.7. Send Data to Web-Viewer 65

TROUBLESHOOTING GUIDE 67

Specifications and Accessories 68

8.1. Standard Accessories 68
8.2. Specifications 69
8.3. Drawings of System 70

EMC INFORMATION 71

SERVICE INFORMATION 73

SOFTWARE LICENSE AGREEMENTS 74

1

SAFETY PRECAUTIONS

1.1. Overview

Safety is everyone's responsibility. The safe use of this instrument is largely dependent upon the installers, users, operators, and managers. It is prerequisite to read and understand these specifications before installing, using, cleaning, fixing or revising. Fully understanding the whole instructions must be the first priority. For this reason, the following safety notices have been placed appropriately within the text of this manual to highlight safety related information or information requiring special emphasis. All users, operators, and maintainers must be familiar with and pay particular attention to all signs of Warnings and Cautions.

⚠ WARNING

"Warning" indicates the presence of a hazard that could result in severe personal injury, death, or substantial property damage if ignored.

"Warning" indique la présence d'un danger pouvant entraîner des blessures graves, la mort ou des dommages matériels importants s'il est ignoré.

⚠ CAUTION

"Caution" indicates the presence of a hazard that could result in minor injury or property damage if ignored.

"Caution" indique la présence d'un danger pouvant entraîner des blessures légères ou des dommages matériels en cas d'ignorance.

⚠ NOTE

This is used to emphasize essential information.
Be sure to read this information to avoid operating the device incorrectly.

Ceci est utilisé pour souligner les informations essentielles.
Assurez-vous de lire ces informations pour éviter d'utiliser l'appareil de manière incorrecte.

2

Symbol Information

The International Electrotechnical Commission (IEC) has established a set of symbols for medical electronic equipment which classify a connection or warn of any potential hazards. The classifications and symbols are shown below.

Symbol	Indication
	This symbol identifies a safety note. Ensure you understand the function of this control before using it. Control function is described in the appropriate User's or Service Manual. (Ce symbole identifie une note de sécurité. Assurez-vous de comprendre la fonction de ce contrôle avant de l'utiliser. La fonction de contrôle est décrite dans le manuel d'utilisation ou d'entretien approprié.)
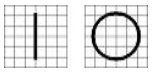	I and O on power switch represent ON and OFF respectively. (O sur l'interrupteur d'alimentation représentent respectivement ON et OFF.)
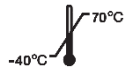	Temperature Limitation (Limitation de température)
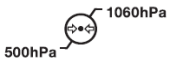	Atmospheric pressure limitation (Limitation de pression atmosphérique)
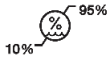	Humidity limitation (Limite d'humidité)
	Stack direction (Direction de la pile)
	Keep DRY (Garder au sec)
	Fragile , handle with care (Fragile, manipuler avec soin)
	Keep away from sunlight (Tenir à l'écart de la lumière du soleil)
	Stack layer limit (Limiter la couche de pile)
	Use no hook (N'utilisez aucun crochet)
	WEEE Symbol – EU only Disposal of your old appliance When this crossed-out wheeled bin symbol is attached to a product it means the product is covered by the European Directive 2002/96/EC. All electrical and electronic products should be disposed of separately from the municipal waste stream via designated collection facilities appointed by the government or the local authorities. The correct disposal of your old appliance will help prevent potential negative consequences for the environment and

	human health. For more detailed information about disposal of your old appliance, please contact your city office, waste disposal service or the shop where you purchased the product. (Symbole WEEE- EU seulement Mise au rebut de votre ancien appareil Lorsque ce symbole de poubelle barrée est joint à un produit, cela signifie que le produit est couvert par la directive européenne 2002/96 / CE. Tous les produits électriques et électroniques doivent être éliminés séparément du flux des déchets municipaux via des installations de collecte désignées par le gouvernement oules autorités locales. L'élimination correcte de votre ancient appareil aidera à prévenir les conséquences negatives potentielles sur l'environnement et la santé humaine. Pour plus d'informations sur l'élimination de votre ancient appareil, veuillez contacter votre mairie, le service d'élimination des déchets ou le magasin où vous avez acheté le produit.)
	Authorized representative in the European Community – EU ONLY (Représentant autorisé dans la Communauté européenne-EU seulement)
	Authorized representative in Switzerland (Représentant autorisé dans la Suisse)
	Manufacturer (Fabricant)
	Date of manufacture (Il indique l'année de fabrication et le fabricant.)
	Refer to instruction manual/booklet (Se reporter au manuel d'instructions / brochure)
	Type B Isolated patient connection (Type B Connexion patient isolée.)
	Warning: Crushing or insert of hand (Attention: écrasement ou insertion de la main)
	QR code (QR code)
	Alternating Current (Courant alternative)

	Identifies the point where the system safety ground is fastened to the chassis. Protective earth connected to conductive parts of Class I equipment for safety purposes. (Identifie le point où la terre de sécurité du système est fixée au châssis. Terre de protection connectée aux parties conductrices des équipements de classe I à des fins de sécurité.)
 E355544	MEDICAL – 355544 EQUIPMENT AS TO ELECTRICAL SHOCK, FIRE AND MECHANICAL HAZARDS ONLY IN ACCORDANCE WITH ANSI/AAMI ES60601-1:2005/A2:2021, CAN/CSA-C22.2 No. 60601-1 (Amendment 2:2022) (MÉDICAL – ÉQUIPEMENT E355544 QUANT AUX RISQUES DE CHOC ÉLECTRIQUE, D'INCENDIE ET MÉCANIQUES UNIQUEMENT CONFORMÉMENT À ANSI/AAMI ES60601-1:2005/A2:2021, CAN/CSA-C22.2 No. 60601-1 (Amendment 2:2022)
	Medical Device (dispositif medical)
	Class I Laser Product (Produit au laser de classe I)
	CE Mark (Marque CE)

2.1. Usage Precautions

This instrument has been developed and tested in conformity with domestic and international safety standards and regulations. This ensures that the instrument maintains a high degree of safety. By law, the manufacturer must thoroughly inform the user about the safety aspects of the instrument. It is imperative that the user should use this instrument according to the manual for their own safety. Therefore, please read the instructions in the manual carefully and fully understand them before turning on the instrument. For more detailed information, please contact our Customer Service Department or one of our authorized representatives.

⚠ CAUTION

For use of equipment in rated voltage less than 125Vac, minimum 6A, Type SJT or SVT, 18/3AWG, 10A, max 3.0m long: One end with Hospital Grade Type, NEMA 5-15P Other end with appliance coupler.
For use of equipment in rated voltage less than 250Vac, minimum 6A, Type SJT or SVT, 18/3AWG, 10A, max 3.0m long: One end terminated with blade attachment plug(HAR) Type, NEMA 6-15P.

Pour l'utilisation d'équipements à une tension nominale inférieure à 125 Vca, minimum 6 A, type SJT ou SVT, 18 / 3AWG, 10 A, max 3,0 m de long: une extrémité avec type hospitalier, NEMA 5-15P Autre extrémité avec coupleur d'appareil.
Pour l'utilisation d'équipement à une tension nominale inférieure à 250 Vca, minimum 6 A, type SJT ou SVT, 18 / 3AWG, 10 A, max 3,0 m de long: une extrémité se termine par un bouchon de fixation de lame (HAR) de type NEMA 6-15P.

⚠ WARNING

Use instrument that comply with IEC60601-1 in the patient environment. [The figure below show]
Utilisez un instrument conforme à la norme IEC60601-1 dans l'environnement du patient. [La figure ci-dessous montre]

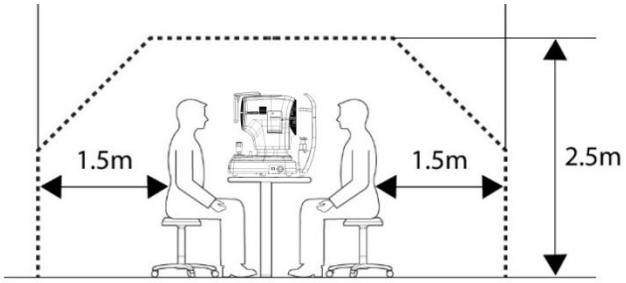

If and instrument that does not comply with IEC 60601-1 is to be used, use an isolation transformer.
If a person handling a conductive part of the system comes into contact with a patient at the same time, hazard may occur due to leakage current exceeding the value specified in the applicable standard. Be careful not to touch patients when connecting or removing the power plug or cable connectors.

Si un instrument non conforme à la CEI 60601-1 doit être utilisé, utilisez un transformateur d'isolement.
Si une personne manipulant une partie conductrice du système entre en contact avec un patient en même temps, un danger peut se produire en raison d'un courant de fuite dépassant la valeur spécifiée dans la norme applicable. Veillez à ne pas toucher les patients lors de la connexion ou du retrait de la fiche d'alimentation ou des connecteurs de câble.

⚠ CAUTION

This instrument includes lithium battery. This hazardous material needs to be disposed of properly to limit environmental pollution. Please contact to the professional waste disposal company.

Cet instrument comprend une pile au lithium. Cette matière dangereuse doit être éliminée correctement pour limiter la pollution de l'environnement. Veuillez contacter la société professionnelle d'élimination des déchets.

⚠ CAUTION

Do not install any software on device without our consent.

The manufacturer is not responsible for any failure due to random installation.

N'installez aucun logiciel sur l'équipement sans notre accord.

Le fabricant n'est pas responsable de toute défaillance due à une installation aléatoire.

⚠ CAUTION

This device has been evaluated in accordance with ISO 15004-2 and is classified as Group 1 Dose Limit and Time Limit.
When used under the normal use conditions, including the specified working distance, exposure duration, and operating mode procedures as described in the instruction for use, the optical radiation exposure to the patient and the user does not pose a hazardous photobiological risk.
For the White LEDs and Blue LED light sources, the device is designed with time-limiting controls to ensure that the cumulative radiant exposure does not exceed 2.2 J/cm², which corresponds to the Group 1 dose limit.
A CAUTION notification is displayed when 70% of the 2.2 J/cm² energy limit is reached, and upon reaching 2.2 J/cm², a CAUTION notification is displayed and the LEDs are automatically power off.
- White LED: 1,150s (when duty 35, single source)
- IR White LED: 6,600s (when duty 100, single source)
- IR Blue LED: 440s (when duty 50, single source)

Cet instrument a été évalué conformément à la norme ISO 15004-2 et est classé comme limite de dose et limite de temps du groupe 1.
Lorsqu'elle est utilisée dans les conditions normales d'utilisation, y compris la distance de travail, la durée d'exposition et le mode d'exploitation spécifiés dans le mode d'emploi, l'exposition optique au patient et à l'utilisateur ne présente pas de risque photobiologique.
Pour les DEL blanches et les sources lumineuses à DEL bleues, l'appareil est conçu avec des contrôles de limitation du temps pour s'assurer que l'exposition cumulative rayonnante ne dépasse pas 2,2 J/cm², ce qui correspond à la limite de dose du groupe 1.
Une mise en garde s'affiche lorsque 70 % de la limite d'énergie de 2,2 J/cm² est atteinte, et lorsqu'elle atteint 2,2 J/cm², une mise en garde s'affiche et que les DEL sont automatiquement éteintes.

- LED blanche: 450s (lorsque le droit de douane 35, source unique)
- IR White LED: 500s (en service 100, source unique)
- IR Blue LED: 230s (lorsque le droit de douane 50, source unique)

⚠ CAUTION

The equipment is a Class I Laser Product. The Laser used for the equipment is safe under expected use conditions including situation such as looking into the LED using optical equipment.
However, observe the following precautions when using the equipment.

- Do not direct Laser beams to human eyes when unncecessary.
- Do not look into the objective lens for a prolonged time.

L'équipement est un produit laser de classe I. Le laser utilisé pour l'équipement est sûr dans les conditions d'utilisation prévues, y compris dans des situations telles que l'examen de la LED à l'aide d'un équipement optique.
Cependant, observez les précautions suivantes lors de l'utilisation de l'équipement.

- Ne dirigez pas les faisceaux laser vers les yeux humains lorsque cela n'est pas nécessaire.
- Ne regardez pas dans l'objectif pendant une période prolongée.

Intended User

The device must be operated by a trained and qualified person or under his or her supervision.
(e.g., Ophthalmologist, orthoptist, doctor of optometry)

2.2. Environmental Considerations

Avoid the following environments for operation or storage:

	Places where the instrument is directly exposed to moisture. Do not operate the instrument with wet hands.
	Places where the instrument is directly exposed to sunlight
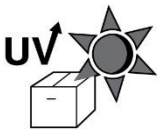	Places where the instrument is exposed to ultraviolet rays
	Places where there are large changes in the temperature The optimal temperature range for normal operation is 10°℃ to 35°℃, and the humidity range is 30% to 90%.
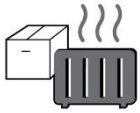	Places where appliances that generate heat are in close proximity
	Places with high humidity and heat emission issues
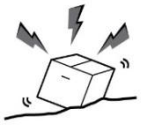	Places where the instrument is exposed to excessive shock or vibration
	Places where the instrument is exposed to chemical materials or explosice gas
	Be careful not to let any dust or metal get inside the instrument.
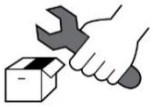	Do not disassemble or open the instrument. The manufacturer does not take responsibility for any problems caused by such actions.

	Do not block the heat vent on top of the instrument.
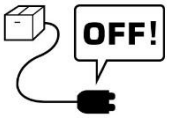	Do not plug the AC power cable unless all instrument parts are completely connected. Otherwise, the instrument will be damaged.
	Do not pull out the power cable by the cord.

This instrument can withstand the following conditions:

1. Operation

- An ambient temperature range of 10℃ ~ 35℃ (50°F ~ 95°F)
- A relative humidity range of 30% ~ 90% (with non-condensing)
- An atmospheric pressure range of 800 ~ 1060hpa
- An illuminance of the measuring room at 10~100 lux

2. Transportation

- An ambient temperature range of -40℃ ~ 70℃ (-40F ~ 158°F)
- A relative humidity range of 10% ~ 95%
- An atmosphere pressure range of 500 ~ 1060hpa

3. Storage

- An ambient temperature range of -10℃ ~ 55℃ (14°F ~ 131°F)
- A relative humidity range of 10% ~ 95% (with non-condensing)
- An atmosphere pressure range of 700 ~ 1060hpa

Avoid environments where the device is exposed to excessive shocks or vibrations.
Do not expose products or packing to environmental conditions outside of those specified above.

2.3. Safety Warnings

⚠ WARNING

1. This is an electric medical device. Use is limited to doctors or persons qualified by the law of each country.
2. Do not make a diagnosis based on a single captured image. Doctors are responsible for making the final diagnosis based on the present and past medical records of the patient such as captured images. Without sufficient information, proper diagnosis may not be made.
3. This device must not be used in an area that is in danger of explosions and in the presence of flammable, explosive, or volatile solvent such as alcohol, benzene or similar chemicals.
4. Do not place or store this instrument in humid area. Do not expose the device to water splashes, dripping water, or sprayed water. Do not place containers with fluids, liquids, or gases on top of this instrument.
5. The device must be operated by a trained and qualified person or under his or her supervision.
6. Repair of this instrument must be conducted by HUVITZ's service technicians or other authorized persons.
7. When a user takes care of its maintenance, the user must follow the instructions in the user and service manuals. Any additional maintenance work must be conducted by a HUVITZ service technician or an equivalently qualified person.
8. Manufacturers are not responsible for the damages caused by unauthorized alterations. Such tampering will forfeit any rights to receive services during the term of guarantee.
9. This instrument should be used with accessories supplied by HUVITZ. If the consumer is to use accessories from another manufacturer, their safety and usability must be checked and proved by HUVITZ or the accessories' manufacturer.
10. Only those who have undergone proper training or education may install, operate, and maintain this instrument.
11. Do not apply excessive force to cable connections. If you find it difficult to connect the cable, check if the connector (plug) is appropriate for the socket. If you have damaged the connector or the socket, you must contact a qualified service technician for repair..
12. Do not pull the instrument's cables. Hold the plug and pull it out when disconnecting a cable.
13. Do not block any ventilation outlet necessary for proper heat dissipation.
14. If smoke, sparks or any abnormal noise or smell is noticed coming from the instrument, please switch the power off immediately and pull out the plug.
15. To avoid the risk of electric shock, this instrument must only be connected to power supply with a protective ground.

16. Do not When placing the instrument, do not place it in a location that makes it difficult to connect or disconnect cables (power cable, external device-connecting cable, etc.).

17. If you intend to connect an external device to an input/output signal or other connectors, they must meet the relevant IEC standards (IEC 60950 for IT devices and IEC 60601-1 series for medical electrical devices). In addition, all such combination-system-shall comply with the standard IEC60601-1 harmonized national standard or the combination. If, in doubt, contact qualified technician or your local representative. The operator should not touch the patient and accessible male parts of the SIP/SOP connectors simultaneously.

18. When carrying the instrument, hold its bottom left (A) and right (B) sides.

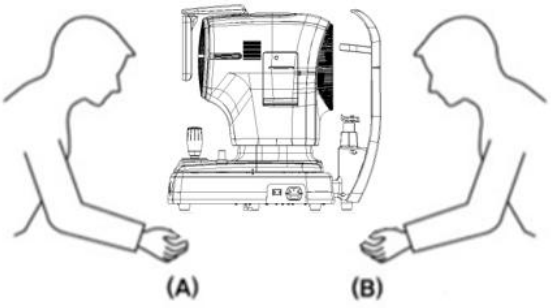

19. Do not touch the instrument directly if the user has a wound in their hand or is allergic to the material used for the contact area.

Part Name	Material
LCD Touch pannel	Glass
Joystick / button	ABS + Silicon, Aluminum(A6061 T6) + Anodizing
Power switch	PC + PA66
Cover	ABS
Chin Rest	ABS

20. Refrain from using the instrument on a patient who is sensitive to light. (e.g. photophobia)

21. When instrument is send back to A/S center for repair or maintenance, or before authorized service man is arrived at the place for repair or maintenance, wipe the surfaces of the instrument (especially, the parts that come into contact with the patient) with a clean cloth dampened with rubbing alcohol.

22. In the event of a serious incident involving the device, the user shall report it to the manufacturer and the competent authority of the Member State in which the user and/or patient are established.

23. If a user uses power save supported by Windows 10 except for the power save in User setting, it causes some trouble in HRKT-1. The manufacturer isn't responsible for the problem.

24. User must not change the setting supported by the manufacturer. This change might make some trouble in HRKT-1. The manufacturer isn't responsible for the problem.

25. Immediately after the test, you may not be able to see clearly due to glare. It is recommended to sit back, relax and move around.

26. When packing box is unintentionally open before use or damaged, please call A/S center.

27. Make sure that you always have an up-to-date virus scanner and firewall installed on your system.

28. Install and operate software within secure operating environment that allows only authorized users to access and that the system network is equipped with Window firewall built-in Windows system, windows Defender antispyware tools and other common security tools /application systems

29. Avoid resetting or turning off the PC when the HRKT-1 running.

30. Even if back up is set to be performed, if the power is not turned on or if the backup location cannot be found, backup is not performed

31. The connection of the electronic interface to an IT network that includes other equipment could result in previously unidentified risks to patients, users or third parties. Identify, analyze, evaluate and control these RISKS.

32. Subsequent changes to the IT-NETWORK could introduce new RISKS and require additional analysis. Changes to the IT-NETWORK include:
    1) changes in IT-NETWORK configuration
    2) addition of items (hardware and/or software platforms or software applications to the IT-NETWORK
    3) removal of items from the IT-NETWORK
    4) update of hardware and/or software platforms or software applications on the IT NETWORK
    5) upgrade of hardware and/or software platforms or software applications on the ITNETWORK

1. Il s'agit d'un appareil médical électrique. L'utilisation est limitée aux médecins ou aux personnes qualifiées par la loi de chaque pays

2. Ne faites pas de diagnostic de base sur une seule image capturée. Les médecins sont chargés d'établir le diagnostic final sur la base des dossiers médicaux actuels et passés du patient, tels que les images capturées. Sans informations suffisantes, un diagnostic approprié ne peut être établi.

3. Cet équipement ne doit pas être utilisé dans une zone à risque d'explosion et en présence de solvants inflammables, explosifs ou volatils tels que l'alcool, le benzène ou des produits chimiques similaires.

4. Ne placez pas et ne stockez pas cet instrument dans un endroit humide. N'exposez pas l'appareil à des projections d'eau, à des gouttes d'eau ou à de l'eau pulvérisée. Ne placez pas de récipients contenant des fluides, des liquides ou des gaz sur le dessus de cet instrument.

5. L'appareil doit être utilisé par une personne formée et qualifiée ou sous sa supervision

6. La réparation de cet instrument doit être effectuée par les techniciens de service HUVITZ ou d'autres personnes autorisées

7. La maintenance par les utilisateurs doit respecter le manuel de l'utilisateur et le manuel de service. Toute maintenance supplémentaire ne peut être effectuée que par les techniciens de service HUVITZ ou d'autres personnes autorisées

8. Les fabricants ne sont pas responsables des dommages causés par des modifications non autorisées. Une telle altération perdra tout droit de recevoir des services pendant la durée de la garantie.

9. Cet instrument doit être connecté aux accessoires fournis par HUVITZ. Si vous devez utiliser d'autres accessoires, leur sécurité ou leur utilisation doit être vérifiée et prouvée par leurs fabricants ou HUVITZ.

10. Seuls ceux qui ont suivi une formation et des instructions appropriées sont autorisés à installer, utiliser, utiliser et entretenir cet instrument.

11. N'appliquez pas de force excessive sur les connexions des câbles. Si le câble ne se connecte pas facilement, assurez-vous que le connecteur (fiche) est adapté à la prise (prise). Si vous avez causé des dommages à un ou plusieurs connecteurs ou prises de câbles, faites réparer les dommages par un technicien de maintenance agréé.

12. Veuillez ne tirer sur aucun câble. Saisissez toujours la fiche lorsque vous débranchez les câbles.

13. Ne bloquez aucune sortie de ventilation nécessaire à une bonne dissipation de la chaleur.

14. Si de la fumée, des étincelles ou un bruit ou une odeur anormale est remarqué provenant de l'instrument, veuillez éteindre immédiatement et débrancher la prise.

15. Pour éviter tout risque de choc électrique, cet instrument doit uniquement être connecté à la terre de protection.

16. Ne placez pas l'instrument là où il est difficile de faire fonctionner le dispositif de déconnexion. (dispositif de déconnexion: câble d'alimentation)

17. Les équipements externes destinés à la connexion à l'entrée, à la sortie de signaux ou à d'autres connecteurs de cet instrument doivent être conformes à la norme CEI pertinente (par exemple, IEC60950 pour les équipements informatiques et IEC60601-1 pour les équipements électromédicaux). De plus, tous ces systèmes combinés doivent être conformes à la norme nationale harmonisée IEC60601-1 ou à la combinaison. En cas de doute, contactez un technicien qualifié ou votre représentant local. L'opérateur ne doit pas toucher simultanément le patient et les parties mâles accessibles des connecteurs SIP / SOP.

18. Lorsque vous transportez ce produit, veuillez tenir en bas à gauche (A) et à droite (B) du produit.

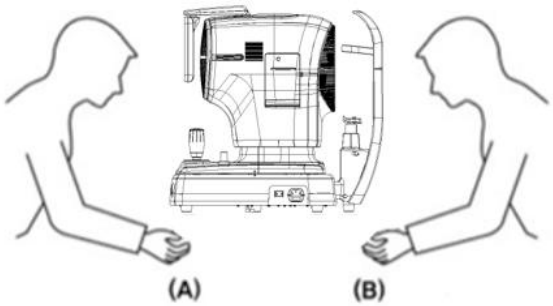

19. Ne pas toucher directement si un opérateur a une blessure à la main ou une réaction allergique importante au matériau utilisé dans la pièce de contact de fonctionnement.

Part Name	Material
LCD Touch pannel	Glass
Joystick / button	ABS + Silicon, Aluminum(A6061 T6) + Anodizing
Power switch	PC + PA66
Cover	ABS
Chin Rest	ABS

20. Ne mesurez pas les patients sensibles à la lumière. (ex> photophobie)

21. Lorsque l'instrument est renvoyé au centre A / S pour réparation ou maintenance, ou avant que le technicien agréé ne soit arrivé sur place pour réparation ou maintenance, essuyez les surfaces de l'instrument (en particulier, les pièces qui entrent en contact avec le patient) avec un chiffon propre imbibé d'alcool à friction.

22. En cas d'incident grave impliquant le dispositif, l'utilisateur le signale au fabricant et à l'autorité compétente de l'État membre dans lequel l'utilisateur et / ou le patient sont établis.

23. Si un utilisateur utilise l'économie d'énergie prise en charge par Windows 10, à l'exception de l'économie d'énergie dans le paramètre Utilisateur, cela provoque des problèmes dans HRKT-1. Le fabricant n'est pas responsable du problème.

24. L'utilisateur ne doit pas modifier le paramètre pris en charge par le fabricant. Cette modification peut entraîner des problèmes dans le HRKT-1. Le fabricant n'est pas responsable du problème.

25. Immédiatement après le test, il se peut que vous ne puissiez pas voir clairement en raison de l'éblouissement. Il est recommandé de s'asseoir, de se détendre et de se déplacer.

26. Lorsque la boîte d'emballage est ouverte par inadvertance avant utilisation ou endommagée, veuillez

appeler le centre A/S.

27. Assurez-vous que vous avez toujours un antivirus et un pare-feu à jour installés sur votre système

28. Installer et utiliser des logiciels dans un environnement d'exploitation sécurisé qui permet uniquement aux utilisateurs autorisés d'accéder et que le réseau du système est équipé d'un pare-feu Windows intégré au système Windows, d'outils anti-logiciels espions Windows Defender et d'autres outils/systèmes d'application de sécurité courants

29. Évitez de réinitialiser ou d'éteindre le PC lorsque le HRKT-1 fonctionne.

30. Même si la sauvegarde est configurée pour être effectuée, si l'alimentation n'est pas allumée ou si l'emplacement de sauvegarde est introuvable, la sauvegarde n'est pas effectuée.

31. La connexion de l'interface électronique à un réseau informatique comprenant d'autres équipements pourrait entraîner des risques non identifiés pour les patients, les utilisateurs ou des tiers. Identifier, analyser, évaluer et contrôler ces RISQUES.

32. Des modifications ultérieures du RÉSEAU INFORMATIQUE pourraient introduire de nouveaux RISQUES et nécessiter une analyse supplémentaire. Les modifications apportées au RÉSEAU INFORMATIQUE incluent :
    1) modifications de la configuration IT-NETWORK
    2) ajout d'éléments (plateformes matérielles et/ou logicielles ou applications logicielles au RÉSEAU INFORMATIQUE
    3) suppression d'éléments du RÉSEAU INFORMATIQUE
    4) mise à jour des plates-formes matérielles et/ou logicielles ou des applications logicielles sur le RÉSEAU INFORMATIQUE
    5) mise à niveau des plates-formes matérielles et/ou logicielles ou des applications logicielles sur le RÉSEAU INFORMATIQUE

2.4. Safety Cautions

⚠ CAUTION

1. Manufacturers are responsible for the safety, reliability, and performance of this instrument only when the following requirements are fulfilled.
   (1) When the instrument has been installed in a proper area, following the manual.
   (2) When the instrument has been operated and maintained according to the manual and service manual.

2. Keep the User's Manual and Service Manual in a place easily accessible at all times for persons operating and maintaining the device

3. Prior to use check the exterior of the instrument and its conditions.

4. When you carry this product, please use a handcart. If you want to move the product to other area, please contact customer service center.

5. The device may be impaired if it is used in a manner not specified by the manufacturers or manual.

6. After the examination, the patient may be slightly dazed. It is recommended to advise the patient to wait few minutes before driving or performing actions that require perfect vision.

7. Contact lenses must not be worn by the patient during data acquisition.

1. Les fabricants ne sont responsables de la sécurité, de la fiabilité et des performances de cet instrument que lorsque les exigences suivantes sont remplies.
   (1) Lorsque l'instrument a été installé dans une zone appropriée, en suivant le manuel.
   (2) Lorsque l'instrument a été utilisé et entretenu conformément au manuel et au manuel d'entretien.

2. Conservez le manuel de l'utilisateur et le manuel d'entretien dans un endroit facilement accessible à tout moment pour les personnes qui utilisent et entretiennent l'équipement.

3. Avant d'utiliser, vérifiez l'extérieur de l'instrument et ses conditions.

4. Lorsque vous transportez ce produit, veuillez utiliser une charrette à bras. Si vous souhaitez déplacer le produit vers une autre zone, veuillez contacter le service clientèle.

5. L'équipement peut être endommagé s'il est utilisé d'une manière non spécifiée par les fabricants ou le manuel.

6. Après l'examen, le patient peut être légèrement étourdi. Il est recommandé de conseiller au patient d'attendre quelques minutes avant de conduire ou d'effectuer des actions nécessitant une vision parfaite.

7. Les lentilles de contact ne doivent pas être portées par le patient pendant l'acquisition des données.

3

INTRODUCTION

3.1. System Outline

The Auto Ref-Topographer, HRKT-1 measures the refractive power of the subject's eye, displaying information on the Sphere (SPH), Cylinder (CYL), and Axis (AXIS). It also measures the size of the image reflected from the cornea to assess refractive power and its defects. It can also be used to take corneal topography using a Placido ring to assess dry eye symptoms and map the corneal surface.

This medical device uses a Micro Lens Array (MLA) to measure light reflected from the retina and the size of the topographic ring reflected from the cornea, enabling the optical measurement of the following ocular components.

* Auto Refractor
  - Refractive power (SPH, CYL, AXIS)
  - Zernike Analysis (ZernikeMap)
  - Retro illumination

* Corneal Topographer
  - Corneal curvature radius
  - Direction of principal meridians
  - White-to-white distance
  - Pupil diameter
  - Dry eye screening

3.2. Intended Use

This device measures the light reflected from the retina using an MLA (Micro Lens Array) to provide information on the refractive power of the eye, and measures the curvature of the cornea and its defects by measuring the size of the image reflected from the cornea and testing for dry eye.

3.3. Classifications

- Classification of product: Class IIa according to Medical Device Regulation 2017/745(MDR) Annex VIII Rule 10
- Resistance against electric shock: Class I (earthed)
- Protection class against electric: Type B (Headrest, chinrest paper)
- Classification of Light hazard: Group I (EN/ISO15004-2 Standard)

3.4. Contraindications

This device should not be used for:

- Patients who are hypersensitive to light.
- Patients who recently underwent photodynamic therapy
- Patients taking medication that causes photosensitivity

There is no any known residual risk other than risks arising from violating contraindication. But, when unexpected event occurs or you encounter different problems, please contact your local distributor or Authorized Representatives.

3.5. Patient Requirements

Patients who are examined with this instrument must maintain concentration for a few minutes and follow the instructions below.

- Firmly position your face on the chin rest and headrest.
- Keep your eyes open.
- Understand and follow the given instructions during the examination.

If patients do not adhere to the instructions above, proper images cannot be obtained.

3.6. Operating Principles

Autorefractor of this device measures the light reflected from the retina using an MLA (Micro Lens Array) to provide information on the refractive power of the eye.
And Corneal topography maps the corneal surface, a key refractive element of the eye. It uses a Placido disc pattern, reflected via a 50% beam splitter attached to the body of the optic. Advanced image processing algorithms then perform edge detection on the reflected pattern to analyze corneal curvature.

3.7. Applied Standard List

- IEC/EN 60601-1: MEDICAL ELECTRICAL EQUIPMENT
  – Part 1: General requirements for safety

- IEC/EN 60601-1-2: Medical electrical equipment Part 1: General requirements for safety
  - Collateral Standard: Electromagnetic compatibility-requirements and tests

- IEC 60825-1: Safety of laser products
  – Part1: Equipment classification and requirements

- ISO 15004-1: Ophthalmic instruments
  – Fundamental requirements and test methods
  General requirements applicable to all ophthalmic instrument

- ISO 15004-2: Ophthalmic instruments - Fundamental requirements and test methods
  – Part 2: Light hazard protection

- ISO 19980: Ophthalmic instruments – Corneal topographers

- ISO 10342: Ophthalmic instruments – Eye Refractometers

4

SYSTEM OVERVIEW

4.1. Configuration and Functions

Front

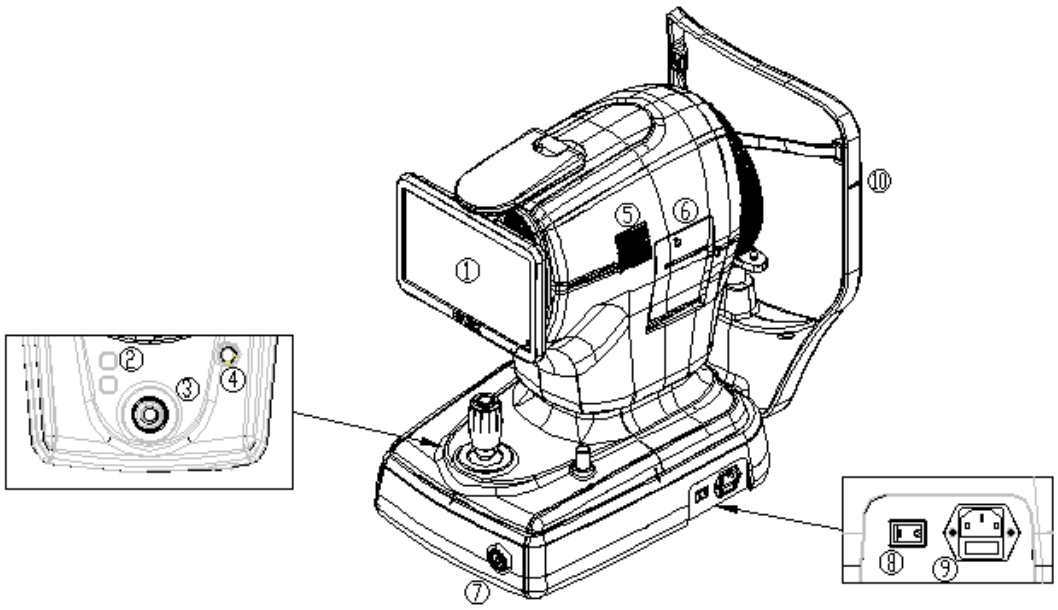

No.	Part	Name	Description
1	Display	LCD	A monitor that displays the image to be captured and the icons that control the instrument,it can be tilted and adjusted according to the user's eye level.
2	Body	Chinrest button	A button that moves the chin rest up and down.
3		Joystick	A tool used for moving the instrument back-forth/left-right/up-down to align it with the patient's eye. After finishing the alignment, the user can begin measurement.
4		User lock	Fixes the instrument's body to its base.
5		Heat vent	A window where the internal heat is released outside.
6		Printer	Print the Ref measurement data.on paper.
7	Base	Power button	A button for powering the instrument's PC ON/OFF. When the power is ON, the button is lit white.
8		Power switch	A button for powering the instrument ON/OFF.
9		Power inlet	An inlet for connecting a power cable to the instrument.
10	Headrest	Eye level mark	Mark for indicating base height of patient's eye.

Rear

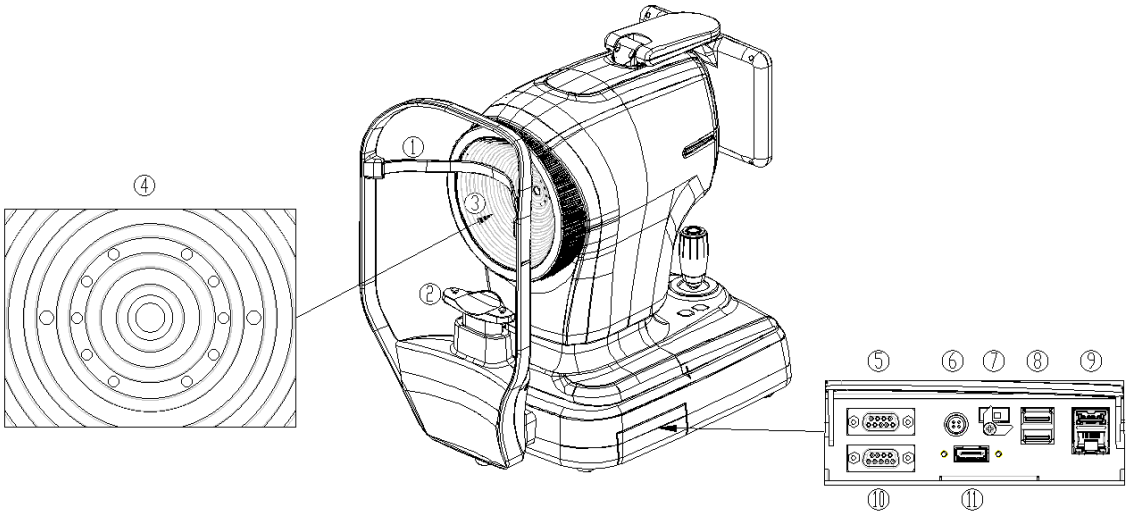

No.	Part	Name	Description
1	Headrest	Headrest	Part where the patient places their forehead
2		Chin rest	Part where the patient places their chin
3	Body	Placido's disk	Enables to map the curvature of the cornea.
4	Placido disk	(1) Focus LED	LEDs to examine patient's eye.
		(2) IR LED	LEDs for measurement and observation.
		(3) White LED	
		(4) Blue LED	
5	Base	RS232 port	A port for RS232 communication (1 port)
6		4pin Connector	A port for connecting a foot switch (1 port)
7		PC Reset switch	A switch for PC BIOS Reset
8		USB port	A set of ports for USB communication (3.0, 1 port / 2.0, 1 port)
9		USB / LAN port	Port for USB communication (3.0, 1 port) A port for LAN communication (1 port)
10		VGA port	A port for connecting an external display device (1 port)
11		HDMI port	A port for connecting an external display device (1 port)

Bottom

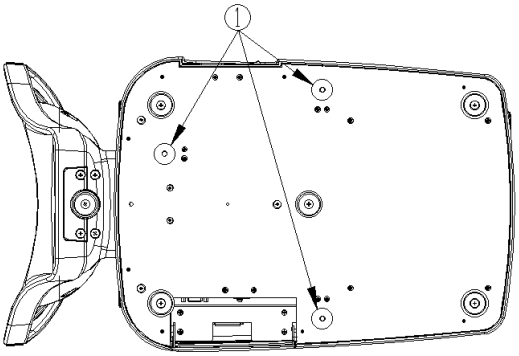

No.	Part	Name	Description
1	Base	Packing lock	Fixes the instrument's body and base during transportation.

4.2. Main Body Screen Description

MEASURE Screen

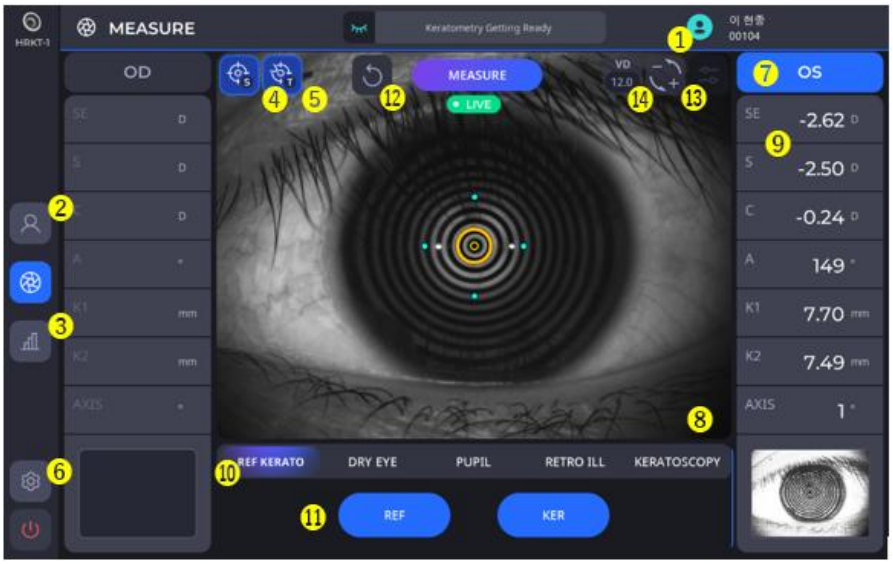

No.	Name	Function
1	Patient Information	Displays patient ID and name in examination.
2	Patient	Goes back to the patient list screen.
3	Result	Goes to the result screen. The result screen shows detailed information on the measured data.
4	AUTO S	Shows auto shooting selection status.
5	AUTO T	Shows auto tracking selection status.

6	Setup	Changes the measurement settings.
7	OD&OS Info.	Displays information on the position (left/right) of the eye that is currently being measured.
8	Camera Image	Displays the real-time camera image.
9	Measurement Value	Displays the most recent measurement results. - SE: Spherical Equivalent - S: Sphere - C: Cylinder - A: Axis - K1: Flat Keratometry - K2: Steep Keratometry - Axis: Angle degree of K1
10	Measurement Mode	Changes the measurement mode.
11	REF&KER	Select the sub-measurement mode.
12	Clear	Delete the measurement result.
13	Cylinder	Reverse the sign of the cylinder value. (REF measurement only.)
14	VD	Switches VD value between a set value (Default, VD=12.0) and VD=0.0.

RESULT Screen

1. Keratometry result screen (KER)



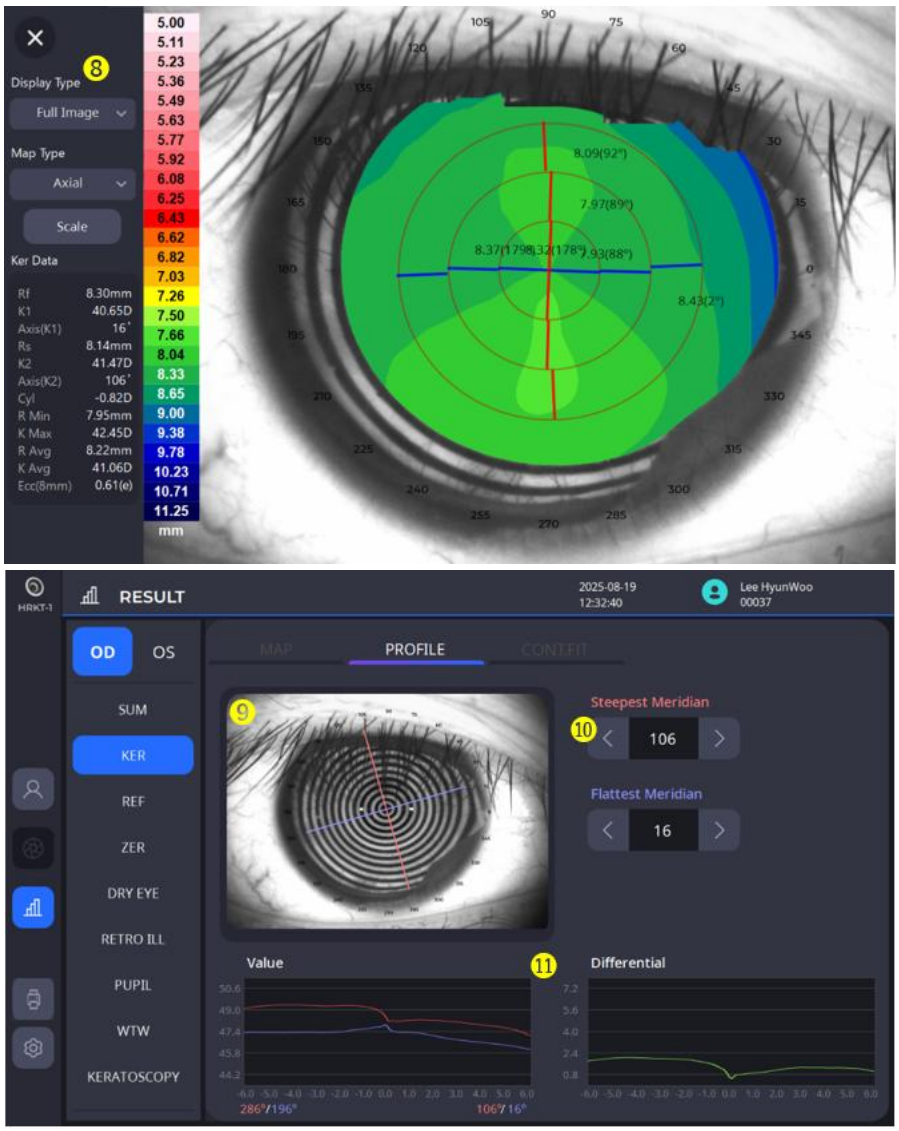

No.	Name	Function
1	Map/Profile/Con.Fit	Map: Displays the topography map with various options. Profile: Displays the curvature along the meridian. Con.Fit: Shows the selected lens fitting map or corneal curvature map.
2	Topo map image	Displays the topo-map image according to the set options.
3	Eye/Map/Ring	Enables the option to turn ON/OFF the display of eye, topo-map, and topo-ring images
4	Axial/Tangential/ Refractive/Elevation	Provides options for a topo-map for selection.
5	Zoom	Displays the map in full-screen.
6	Topography Result	Displays the detailed values (SimK, Meridian, Keratoconus) based on the selection. SimK: Displays the measured SimK data. Meridian: Displays the measured data for the area ranged 3 to 7 mm or 2 to 6 mm from the center point. (K1: Flat Keratometry, K2: Steep Keratometry, Avg: Average of Keratometry value in the zones, Cyl: Cylinder and Angle degree of K1) Keratoconus: Displays the expected results for keratoconus. (Non-Keratoconus, Keratoconus Suspicious, Central or Peripheral Steepening Keratoconus).

7	Scale	Set the topo-map options, such as color scale, step, and overlay.
8	Display Type	Provides selection options for Full Image, 4 Images, and Comparison. Full Image: Displays one map in an enlarged version. 4 Images: Displays all maps for Axial, Tangential, Refractive Power, and Elevation options on one screen. Comparison: Compares the previously measured map data with the current data and displays the comparison map together.
9	Eye Image & Meridian	Displays an eye image marked with steep and flat meridians.
10	Control Meridian	Changing a meridian's angle updates the corresponding graph.
11	Value Graph & Differential Graph	Shows the radius/diopter based on the meridian types. On the differential graph, you can check the difference between the steepest meridian and the flattest meridian.

1.1 Contact Lens Fitting result screen.



No.	Name	Function
1	Lens Fitting Map / Corneal Curvature Map	Shows the fitting map or corneal curvature map of the selected lens of the subject.
2	Select Corneal Curvature Map	Select a corneal curvature map (Axial/Tangential Maps supported).
3	Select Lens Fitting Map	If a lens is selected, the lens fitting map is displayed.
4	Long-axis/short-axis lens fitting graph	For the selected lens, the distance between the cornea and the lens is displayed for the long and short axis.
5	Select a lens manufacturer	Select the lens manufacturer.
6	Select a lens	If a manufacturer is selected, select a lens list for that manufacturer.
7	Edit lens information	Edit the information for the selected lens.
8	Corneal curvature information	Displays the subject's corneal curvature information.

1.2 Lens information edit screen

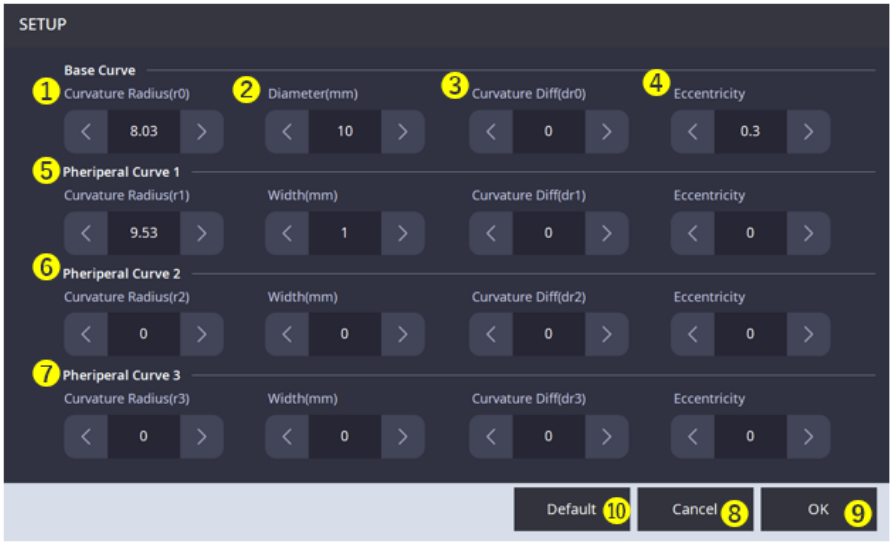

No.	Name	Function
1	Set lens curvature	Sets the curvature of the lens.
2	Set lens length	Sets the length of the lens. Base Curve Diameter (mm): Total length. Peripheral Curve Width (mm): Length of the corresponding peripheral curve.
3	Set curvature difference	Sets the curvature difference value of the lens.
4	Set eccentricity	Sets the eccentricity of the lens.
5	Set primary curve	Sets the curvature / length / curvature difference / eccentricity of the primary curve.
6	Set secondary curve	Sets the curvature / length / curvature difference / eccentricity of the secondary curve.
7	Set tertiary curve	Sets the curvature / length / curvature difference / eccentricity of the tertiary curve.
8	Cancel settings	Cancels the current settings and returns to the lens fitting screen.
9	Apply settings	Saves the current settings and returns to the lens fitting screen.
10	Default settings	Automatically sets the lens settings most similar to the currently measured results.

2. REF measurement result screen

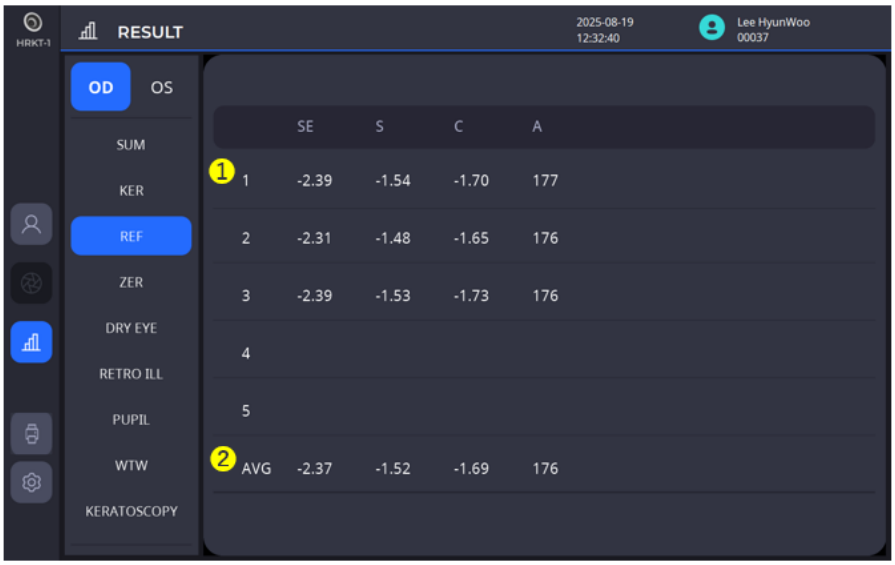

No.	Name	Function
1	SE / S / C / A	Displays the recent five measurements results(refractive power).
2	AVG	The average value is displayed.

3. Zernike result screen (ZER)

3.1 TOPO

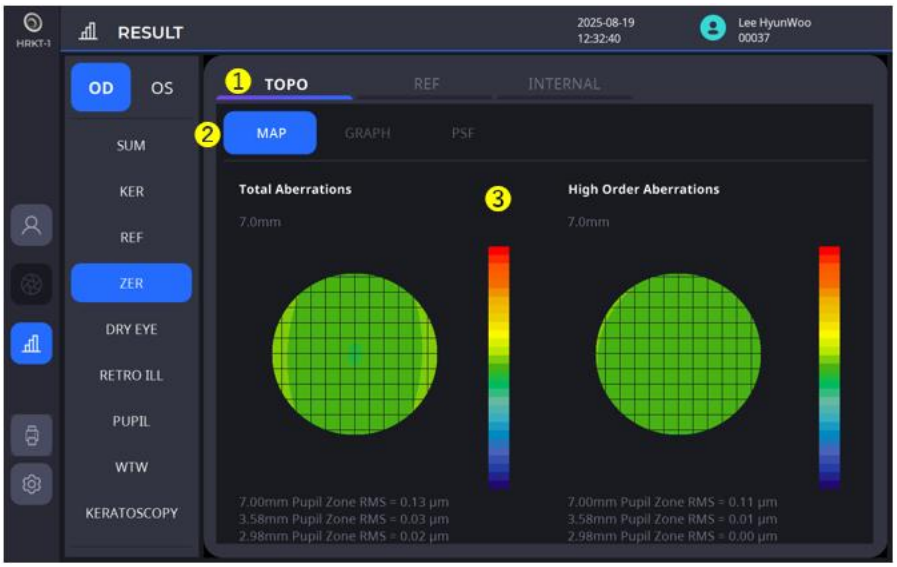

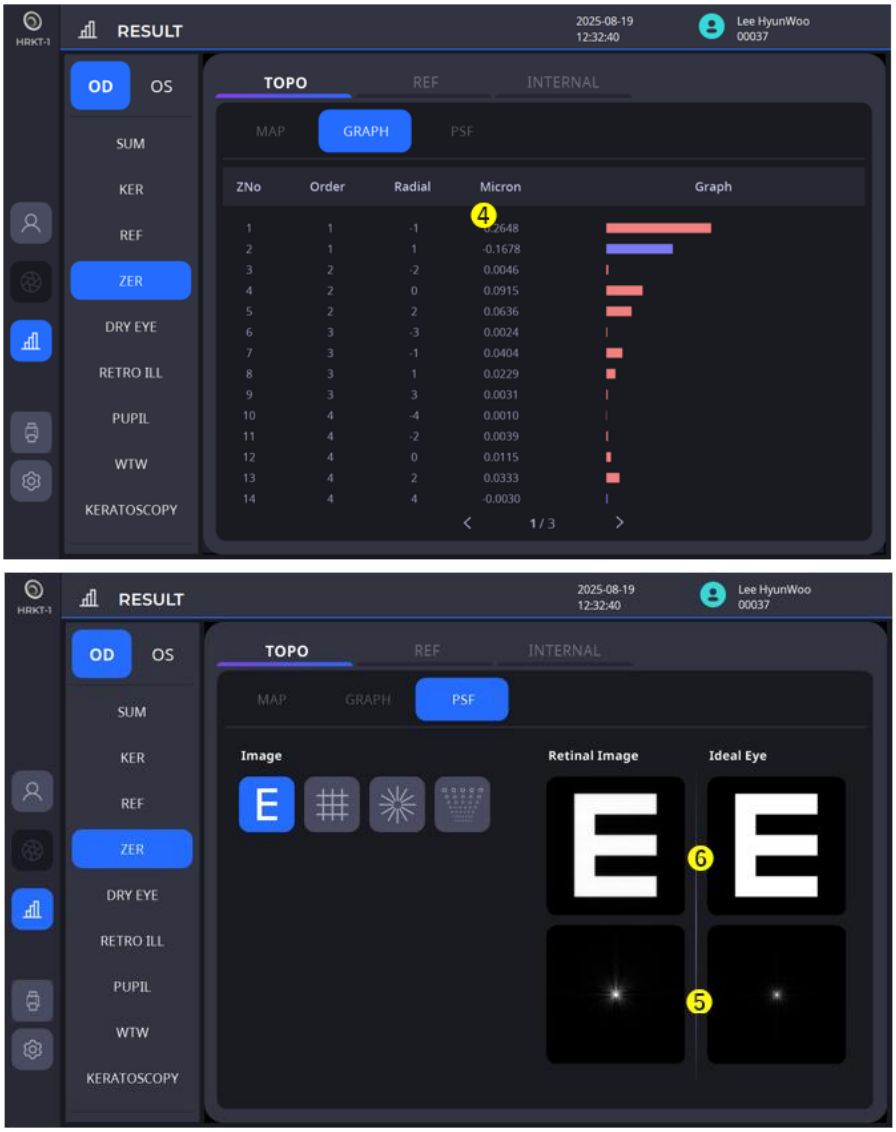

No.	Name	Function
1	TOPO/REF/INTERNAL	TOPO: Displays aberration information calculated based on the corneal topography. REF: Displays the results of wavefront aberration measurements for the entire eye. (including the cornea). INTERNAL: Displays the calculated aberrations of the internal eye (e.g., Crystalline lens) excluding the cornea.
2	MAP/GRAPH/PSF	MAP: Displays an aberration map. GRAPH: Displays a distribution graph of coefficient values. PSF: Displays a point spread image and an applied chart image.
3	Total Aberrations/ High Order Aberrations	Displays the overall wavefront aberration and higher-order aberration map.
4	Expansion Coefficients	Displays a graph of Zernike coefficients.
5	Point Spread Function	Displays a PSF image composed of Zernike coefficients.
6	Chart Images	Displays an image with a PSF applied to the selected chart.

3.2 REF


HRKT-1
RESULT
2025-08-19
12:32:40
Lee HyunWoo
00037
OD
OS
1
TOPO
REF
INTERNAL
2
MAP
GRAPH
PSF
SUM
KER
REF
ZER
DRY EYE
RETRO ILL
PUPIL
WTW
KERATOSCOPY
Total Aberrations
3.58 mm
3
High Order Aberrations
3.58 mm
RMS = 1.30 μm
RMS = 0.12 μm
S -1.53
C -1.73
A 176
Total-RMS 1.299
HOA-RMS 0.121
LOA-RMS 1.293
Pupil size 3.58
4
PUPIL SIZE
5
Day(3mm)
Max

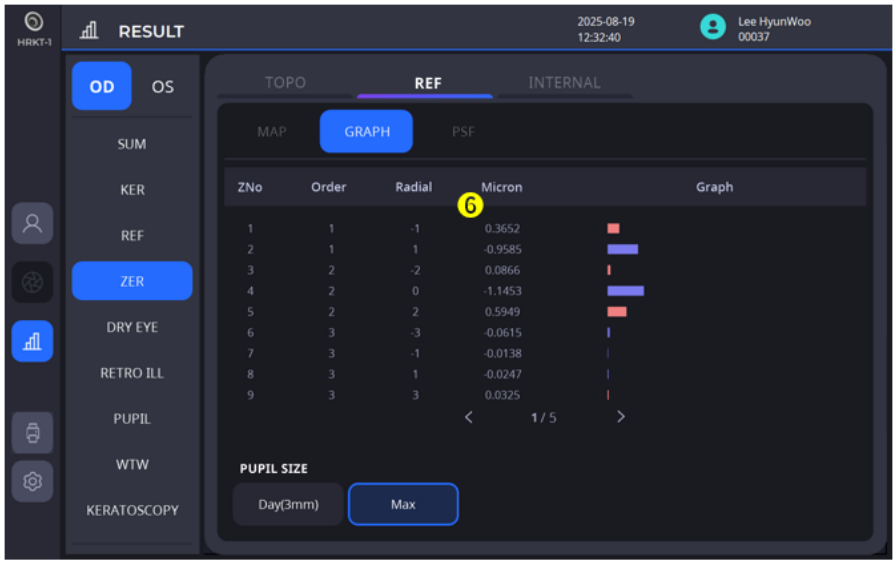
HRKT-1
RESULT
2025-08-19
12:32:40
Lee HyunWoo
00037
OD
OS
TOPO
REF
INTERNAL
MAP
GRAPH
PSF
SUM
KER
REF
ZER
DRY EYE
RETRO ILL
PUPIL
WTW
KERATOSCOPY
ZNo Order Radial Micron Graph
6
1 1 -1 0.3652
2 1 1 -0.9585
3 2 -2 0.0866
4 2 0 -1.1453
5 2 2 0.5949
6 3 -3 -0.0615
7 3 -1 -0.0138
8 3 1 -0.0247
9 3 3 0.0325
1 / 5
PUPIL SIZE
Day(3mm)
Max

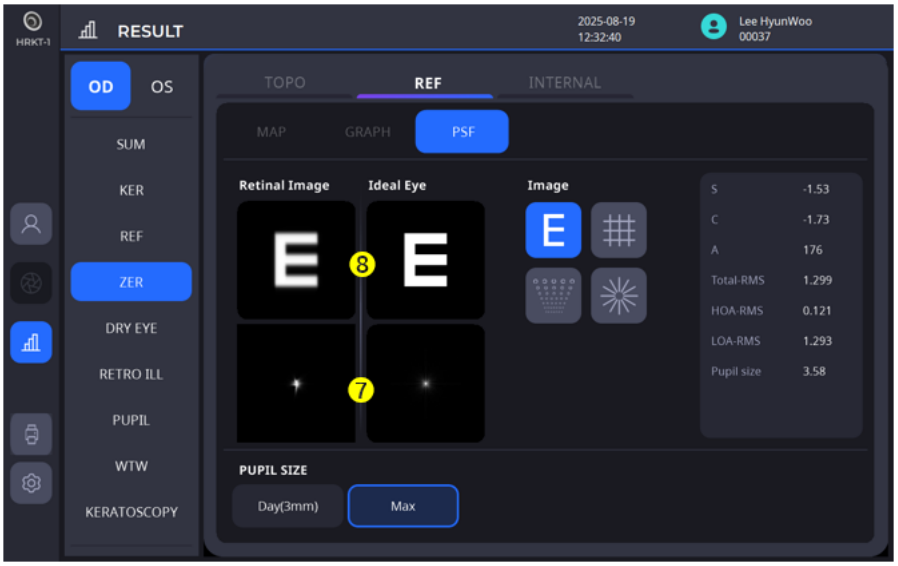
HRKT-1
RESULT
2025-08-19
12:32:40
Lee HyunWoo
00037
OD
OS
TOPO
REF
INTERNAL
MAP
GRAPH
PSF
SUM
KER
REF
ZER
DRY EYE
RETRO ILL
PUPIL
WTW
KERATOSCOPY
Retinal Image
Ideal Eye
Image
8
7
S -1.53
C -1.73
A 176
Total-RMS 1.299
HOA-RMS 0.121
LOA-RMS 1.293
Pupil size 3.58
PUPIL SIZE
Day(3mm)
Max

No.	Name	Function
1	TOPO/REF/INTERNAL	TOPO: Displays aberration information calculated based on the corneal topography. REF: Displays the results of wavefront aberration measurements for the entire eye. (including the cornea). INTERNAL: Displays the calculated aberrations of the internal eye (e.g., Crystalline lens) excluding the cornea.
2	MAP/GRAPH/PSF	MAP: Displays an aberration map. GRAPH: Displays a distribution graph of coefficient values. PSF: Displays a point spread image and an applied chart image.
3	Total Aberrations/ High Order Aberrations	Displays the overall wavefront aberration and higher-order aberration map.
4	S/C/A/ Total-RMS/HOA-RMS/ LOA-RMS/Pupil SIze	S: Sphere / C = Cylinder / A = Axis Total RMS: Average of all wavefront aberrations HOA-RMS: Average of higher-order aberrations LOA-RMS: Average of lower-order aberrations Pupil Size: Measurement area (e.g., 3.00 mm radius from the center of the pupil)
5	Pupil Size	Shows results based on Pupil Size area.
6	Expansion Coefficients	Displays a graph of Zernike coefficients.
7	Point Spread Function	Displays a PSF image composed of Zernike coefficients.
8	Chart Images	Displays an image with a PSF applied to the selected chart.

3.3 INTERNAL

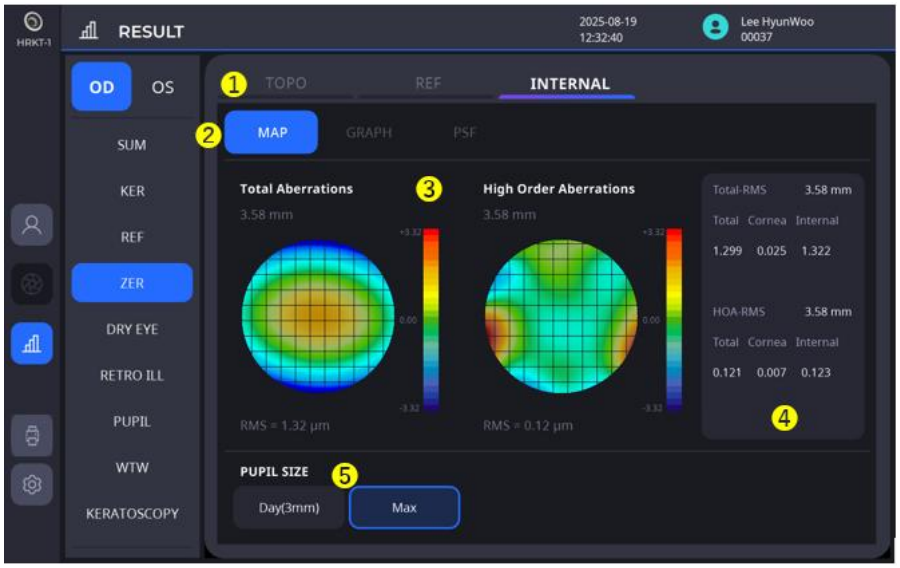

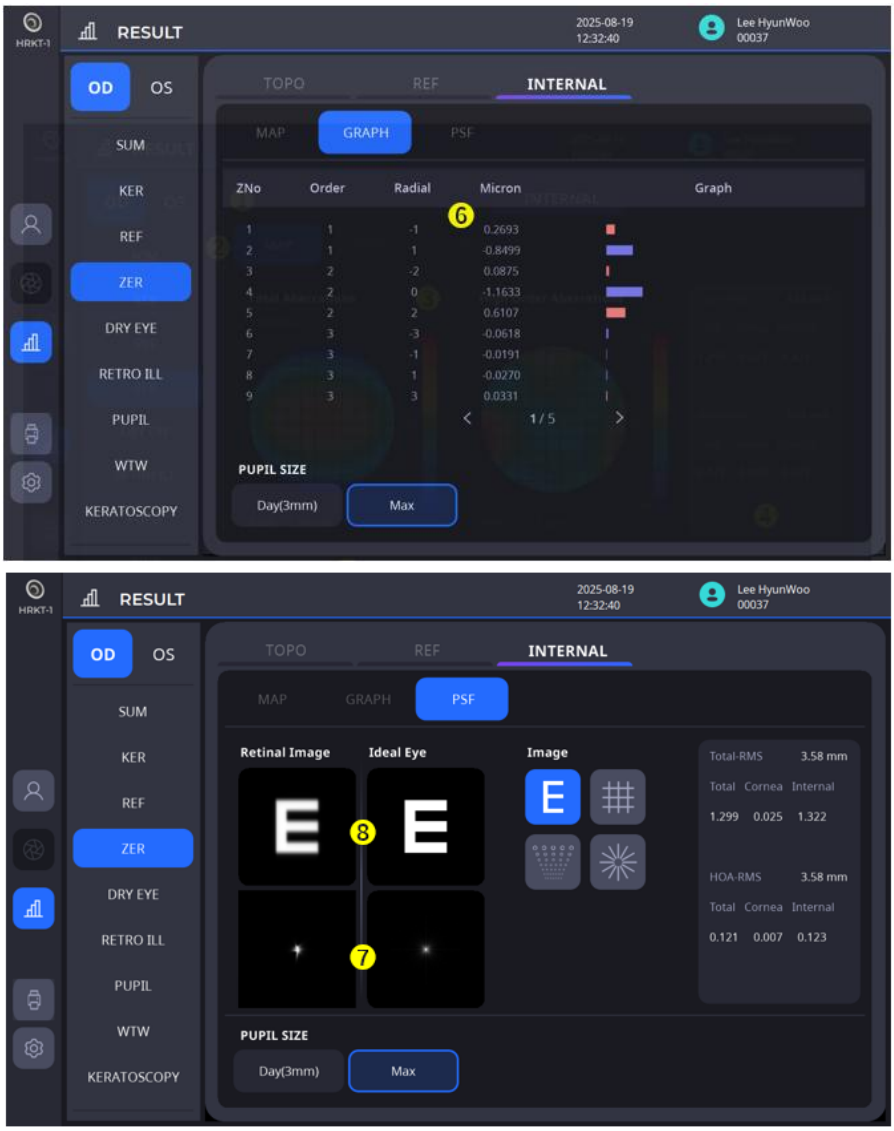

No.	Name	Function
1	TOPO/REF/INTERNAL	TOPO: Displays aberration information calculated based on the corneal topography. REF: Displays the results of wavefront aberration measurements for the entire eye. (including the cornea). INTERNAL: Displays the calculated aberrations of the internal eye (e.g., Crystalline lens) excluding the cornea.
2	MAP/GRAPH/PSF	MAP: Displays an aberration map. GRAPH: Displays a distribution graph of coefficient values. PSF: Displays a point spread image and an applied chart image.
3	Total Aberrations/ High Order Aberrations	Displays the overall wavefront aberration and higher-order aberration map.
4	Total RMS/HOA-RMS/	Total RMS: Average of all wavefront aberrations HOA-RMS: Average of higher-order aberrations Total: Wavefront aberration of the entire eye Cornea: Anterior corneal aberration Internal: Internal ocular aberrations excluding the cornea (Total – Cornea)
5	Pupil Size	Shows results based on Pupil Size area.
6	Expansion Coefficients	Displays a graph of Zernike coefficients.
7	Point Spread Function	Displays a PSF image composed of Zernike coefficients.
8	Chart Images	Displays an image with a PSF applied to the selected chart.

4. Pupillometry result screen (PUP)

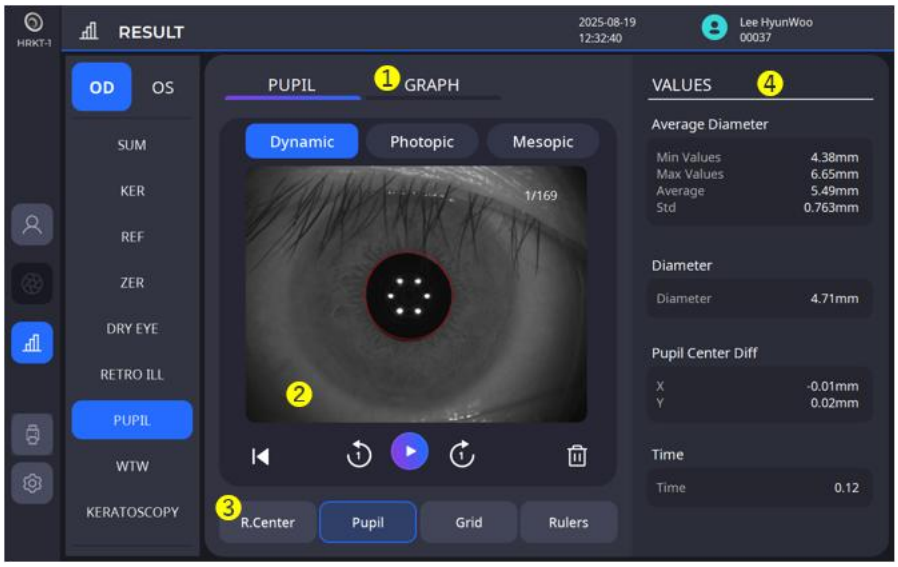



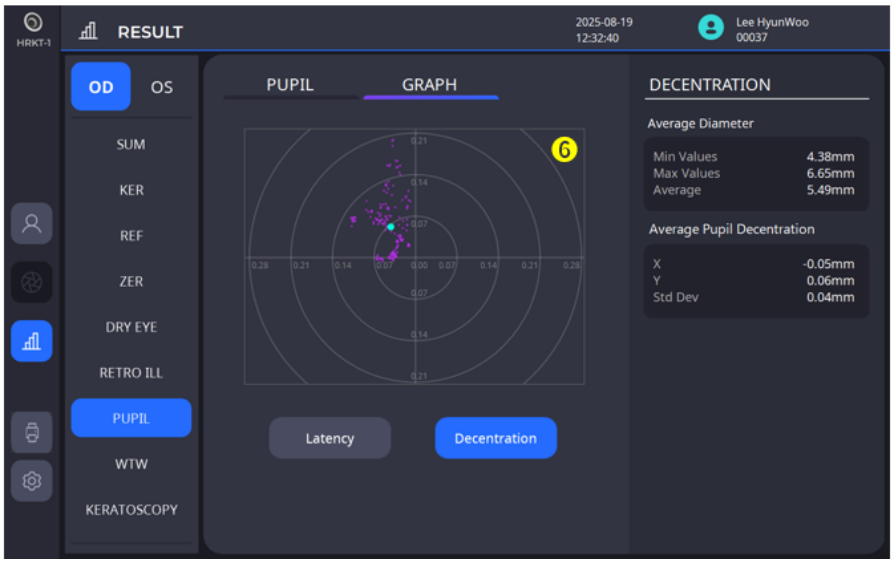

No.	Name	Function
1	Pupil/Graphs	Pupil: Displays continuous images of the pupil. Pupil changes can be observed. Graph: Displays the latency and decentration graph.
2	Captured Image	Displays the image captured during measurement.
3	Display Options	Among the options below, displays the selections together on the screen.
4	Measurement Values	Displays the measured data.
5	Latency	Displays the measured pupil size in a latency graph.
6	Decentration	Displays how far the eye's center and the pupil's center are out of alignment.

5. White to White result screen (WTW)

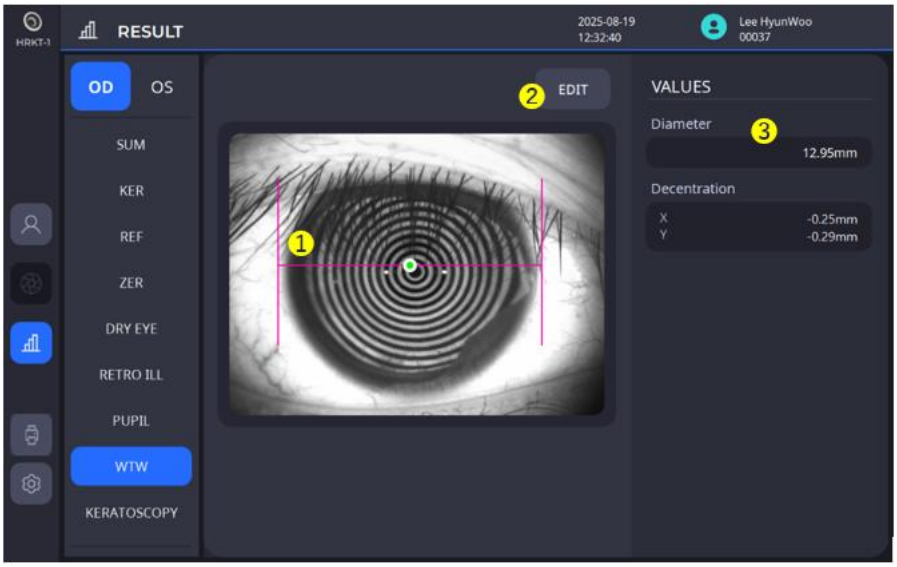

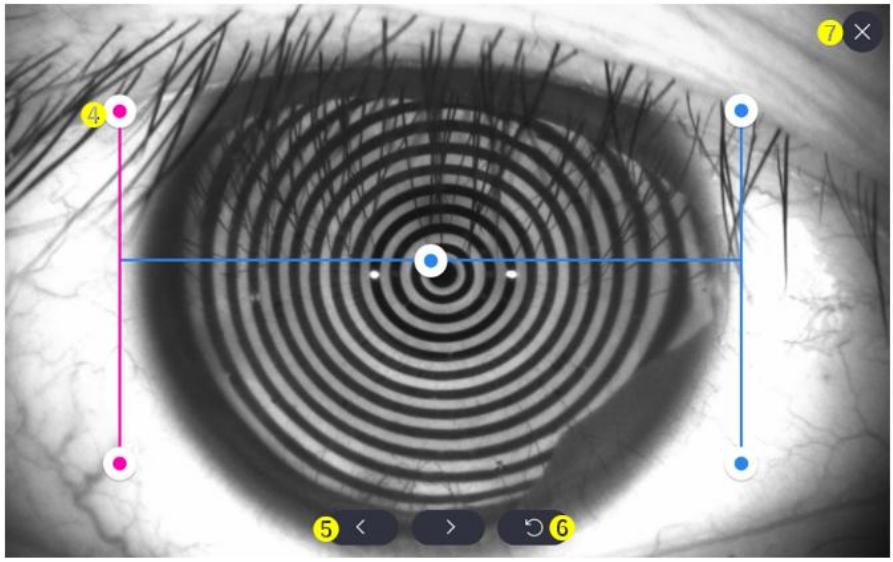

No.	Name	Function
1	WTW Bar	Displays the result of the WTW measurement.
2	Edit	Edits the WTW bar status on the edit window.
3	Values	Displays the White to White value.
4	Edit Window - Edit Bar	The bar turns pink when clicked, which indicates that the edit mode is now active. While the bar is active, you can move it to change the WTW position.
5	Edit Window - Detailed Move Buttons	Since it is difficult to make a detailed move for the bar on a small screen, these buttons are used for fine adjustments.
6	Edit Window - Reset	Relocates the bar to the original position.
7	Edit Window - Save and Close	After finishing the editing, saves and closes the edit window.

6. Dry Eye Test result screen

6.1 Questionnaire (OSDI Questionnaire)

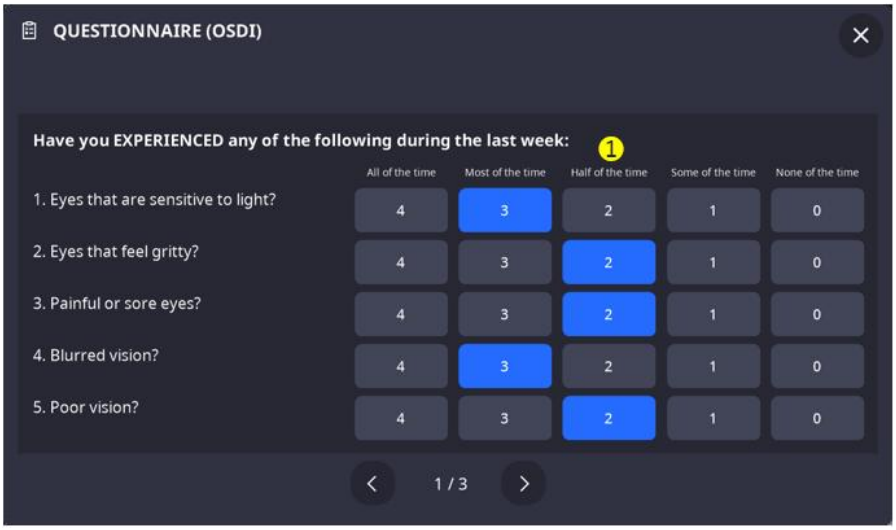

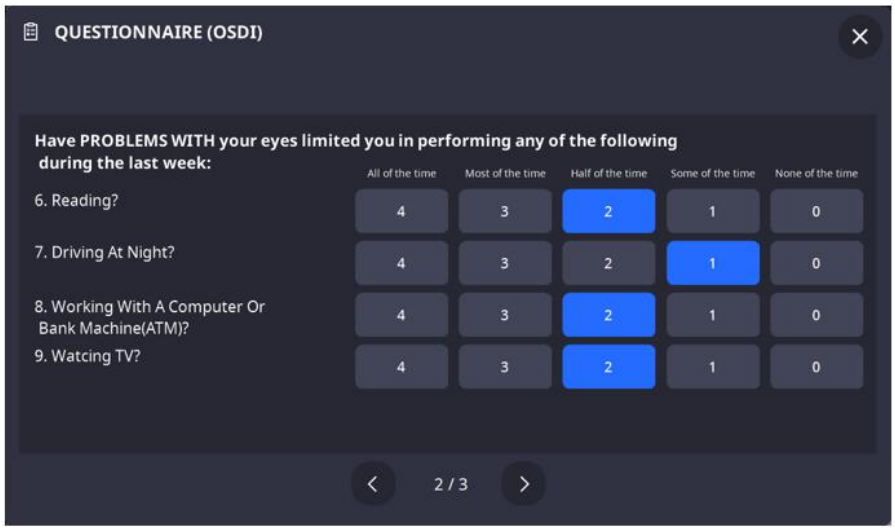

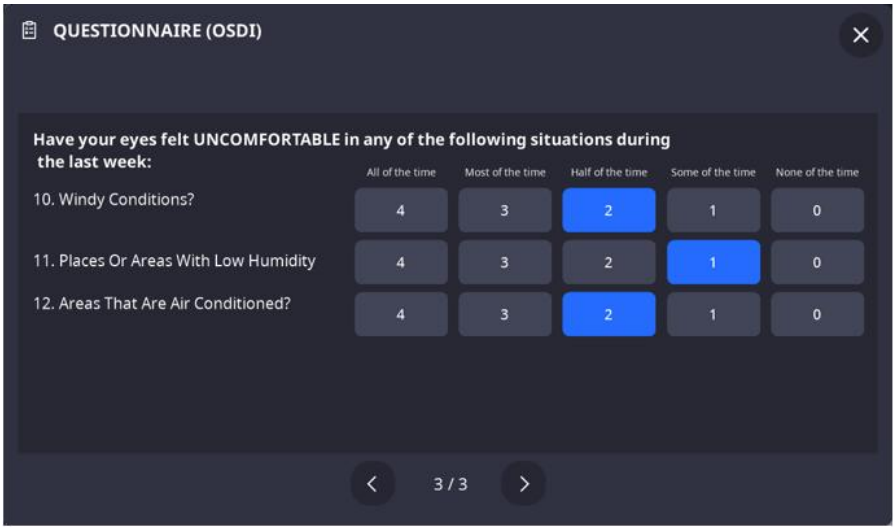

No.	Name	Function
1	Questionnaire Content	Fills out the questionnaire.

6.2 Lipid Layer

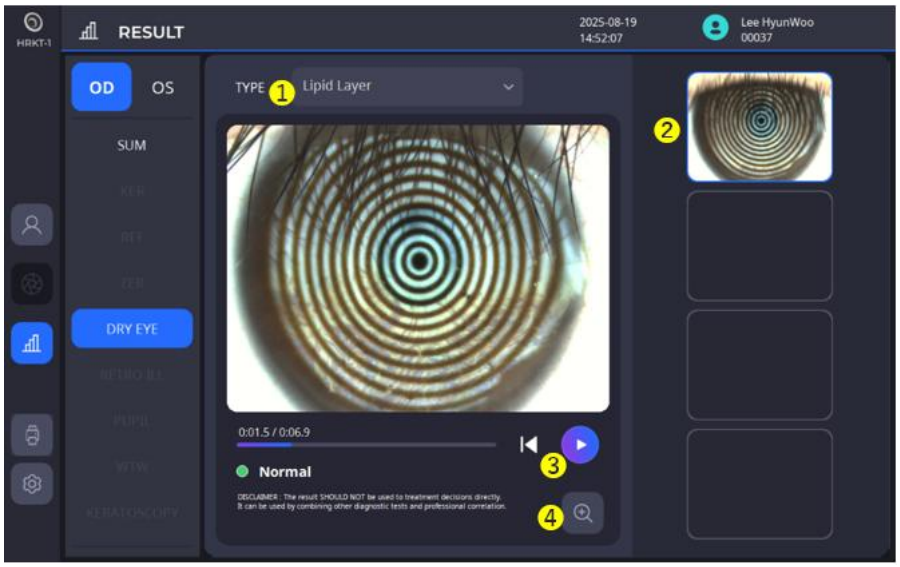

No.	Name	Function
1	Type	Provides options to select a dry eye screening result.
2	Select recorded video	Provides options to select the recorded video to check the results.
3	Play	Plays a video.
4	Zoom	Displays the result on a bigger screen.

6.3 Tear Meniscus Height

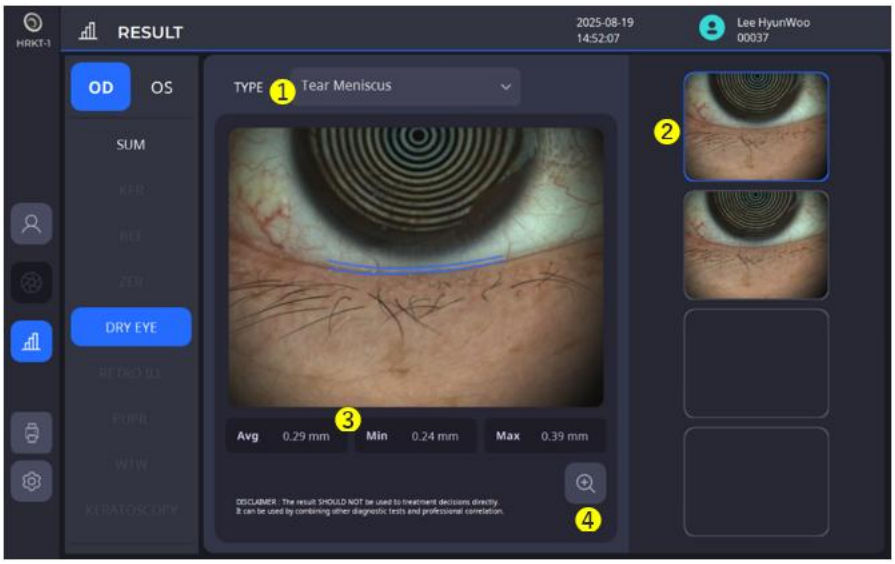

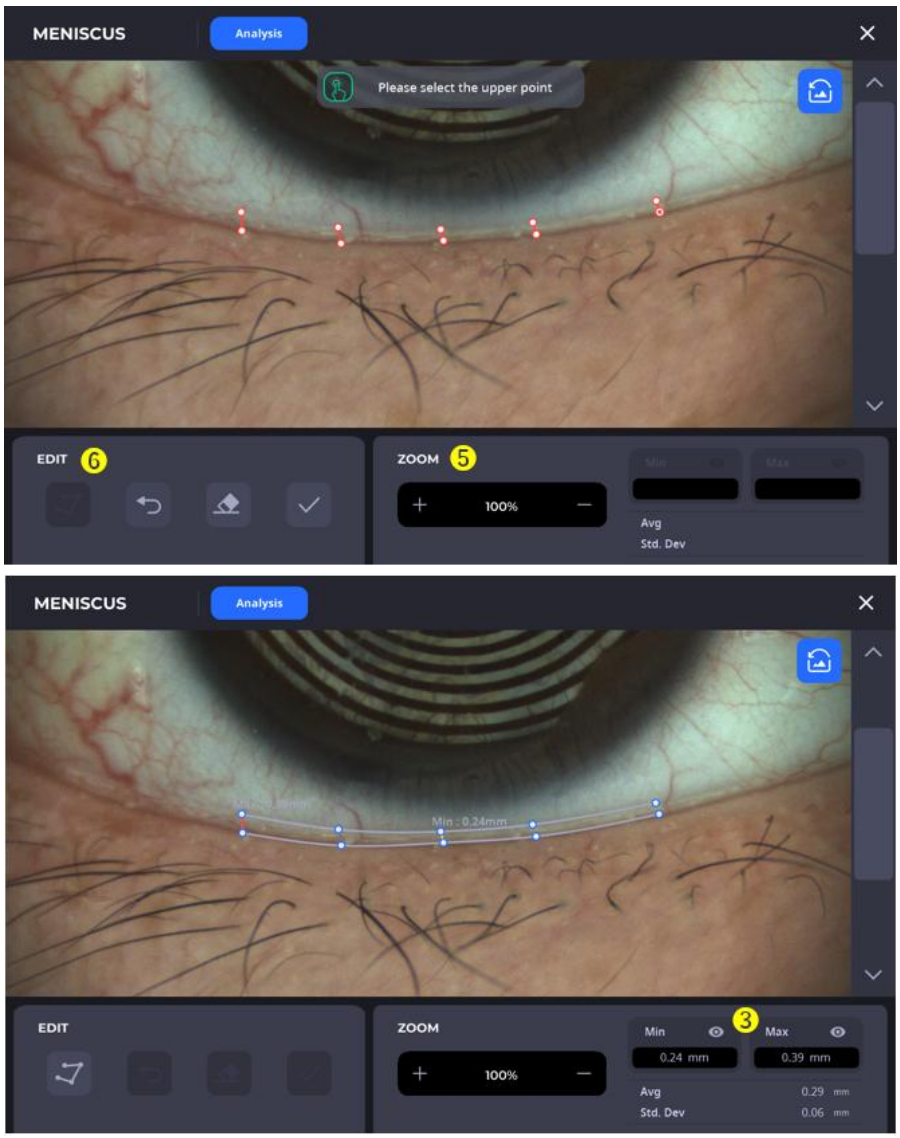

No.	Name	Function
1	Type	Provides options to select a dry eye screening result.
2	Select captured image	Provides options to select the captured image to conduct analysis.
3	Analysis Result	Displays the analysis result.
4	Detail Analysis	Displays the analysis to check and edit the selected image in detail.
5	Zoom	Zooms in/out the image for analysis.
6	Edit	Set and edit the selected area for analysis.

6.4 NIBUT (Non-Invasive Break-up Time)

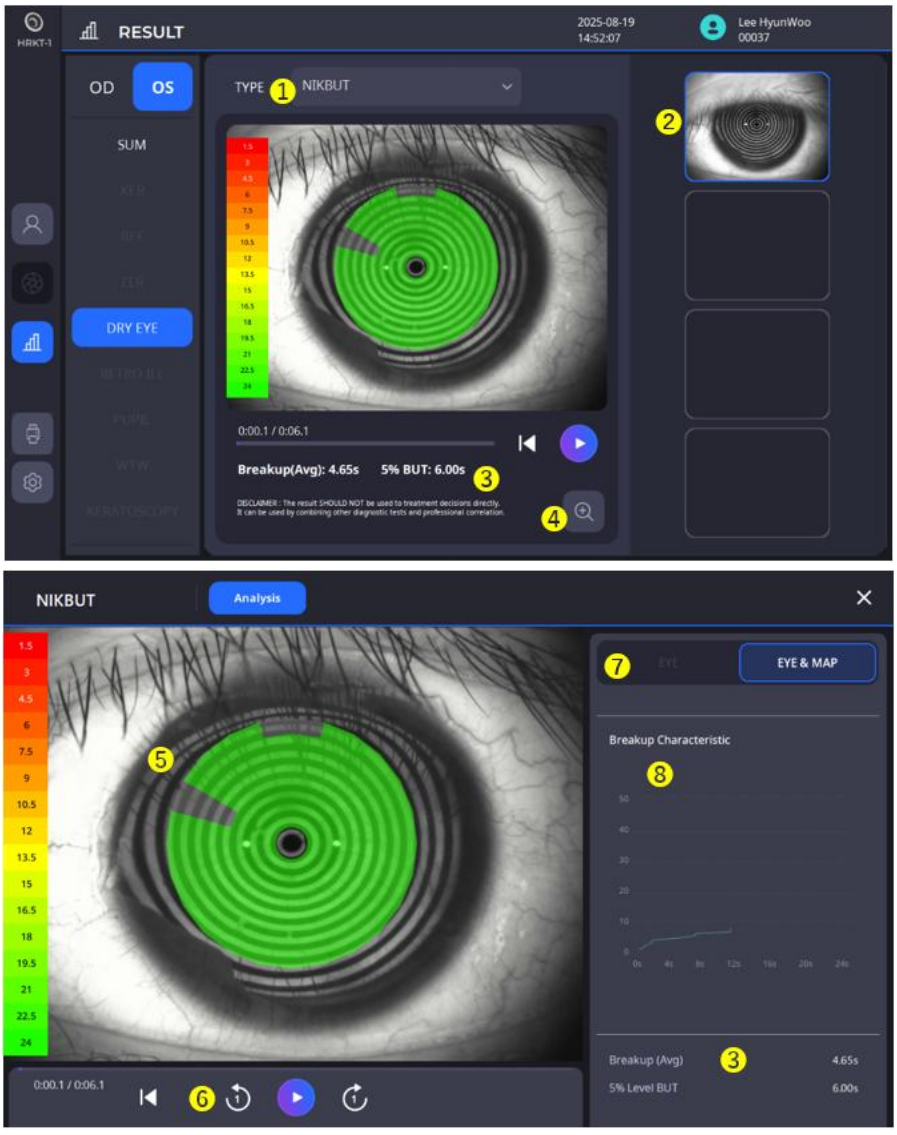

No.	Name	Function
1	Type	Provides options to select the desired dry eye screening result.
2	Select recorded video	Provides options to select the recorded video to check the results.
3	Analysis Result	Displays the analysis result.
4	Detail Analysis	Displays the analysis to check the selected video data in detail.
5	Color Map	Displays the broken area of the tear film in a map with the degree of the break-up.
6	Play	Plays a video or navigates a video frame by frame.
7	Eye & Map	Displays the eye/map images together on the video based on your selection.
8	Breakup Graph	Shows the break-up over time in a graph.

6.5 Meibography

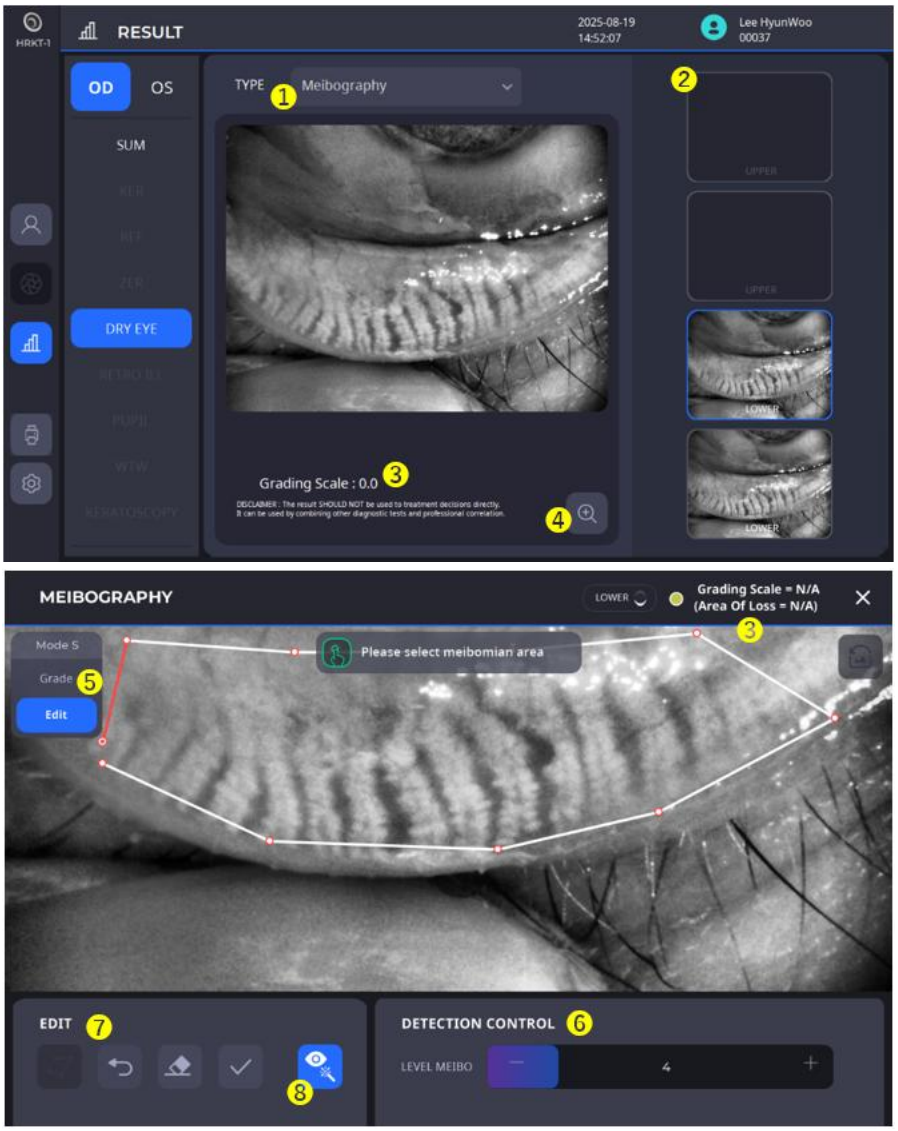

No.	Name	Function
1	Type	Provides options to select a dry eye screening result.
2	Select captured image	Provides options to select a shot image to conduct meiboraphy.
3	Analysis Result	Displays the analysis result.
4	Detail Analysis	Displays the analysis to check and edit the selected image in detail.
5	Area Mode	Provides options to automatically or manually select the area for meibography.
6	Detection Control	Set the detection level for meibography.
7	Edit	Set and edit the selected area for meibography.
8	Enhancement Enabled	Displays the enhanced image while highlighting.

6.6 Blink Analysis

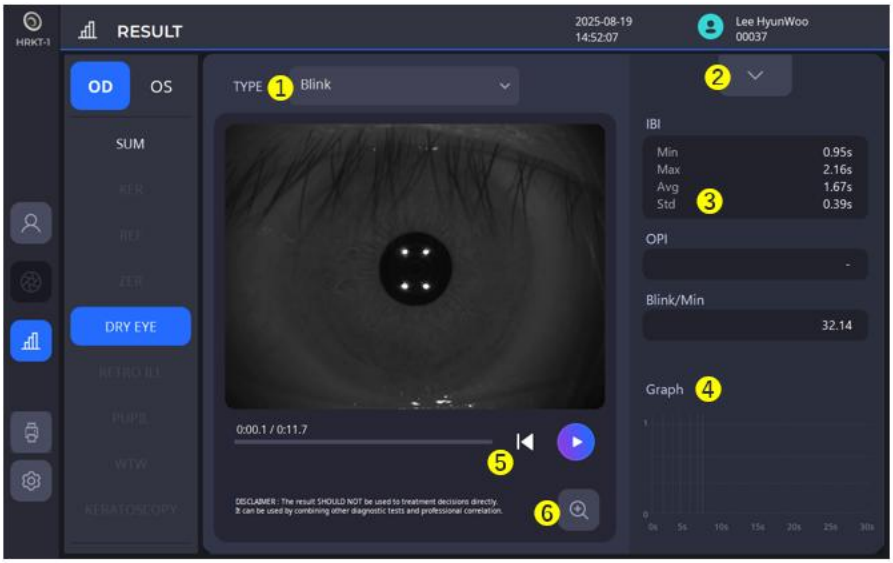

No.	Name	Function
1	Type	Provides options to select a dry eye screening result.
2	video List	Displays the list of recorded videos.
3	Analysis Result	Displays the analysis result.
4	Blink Graph	Displays the blinking moments over time in a graph.
5	Play	Plays the video.
6	Zoom	Displays the result on a bigger screen.

7. Retro illumination result screen

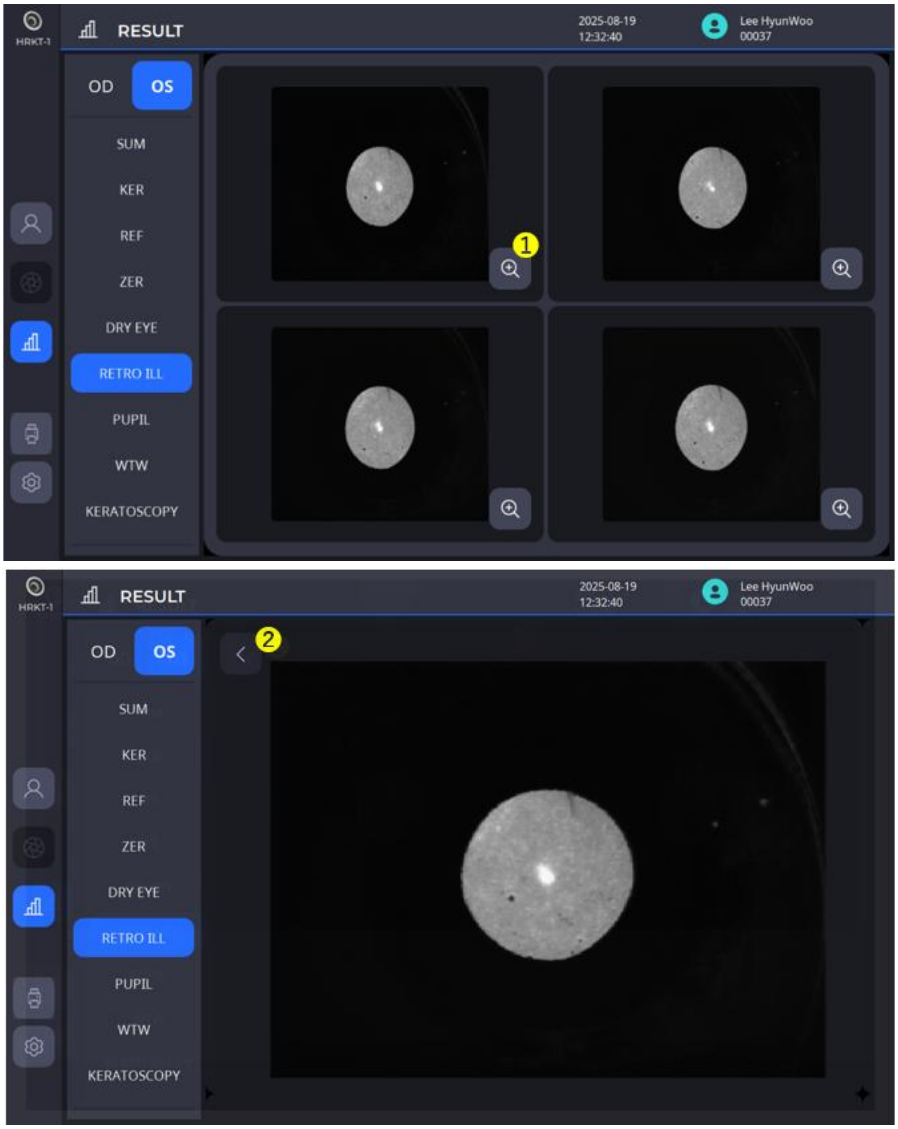

No.	Name	Function
1	Zoom	Displays the result on a bigger screen.
2	Back	Return to the previous screen.

5

INSTALLATION PROCEDURE

5.1. System Installation

1. Place the main body on a stable table.
2. Loosen the two packing lock screw under the main body.

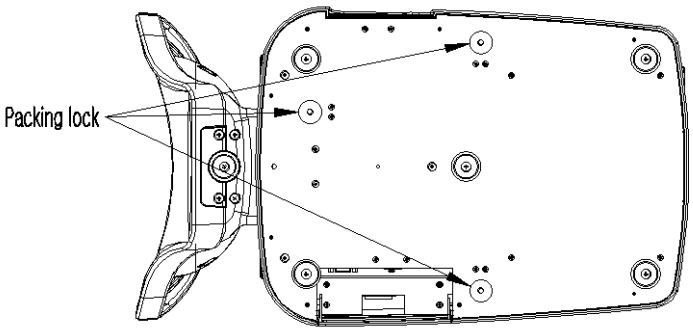

3. Unscrew the user lock lever on the body.

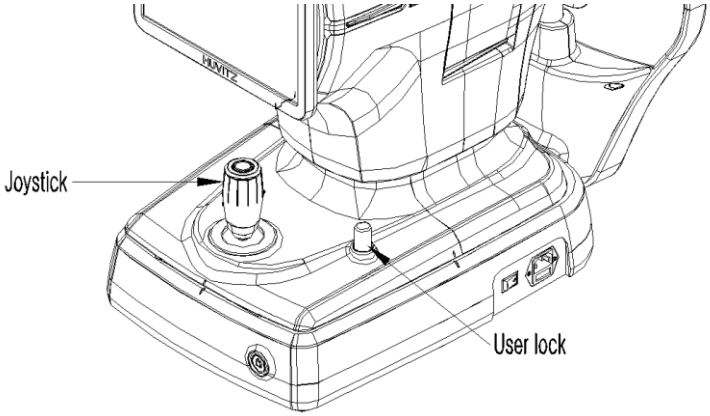

4. Attach the chin rest paper to the chin rest.
5. Connect external devices, if necessary.
   (1) Open the “External Port Cover” located on the lower left side of device’s base by lifting it with hand.

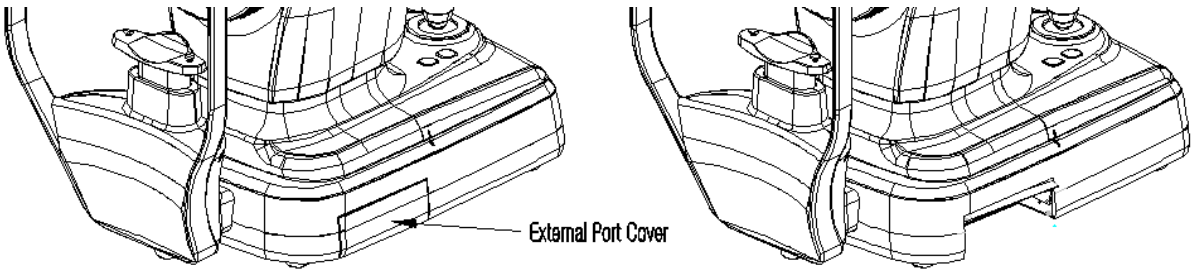

(2) Connect mouse and keyboard, if necessary.

(3) Connect communication cable of external device.

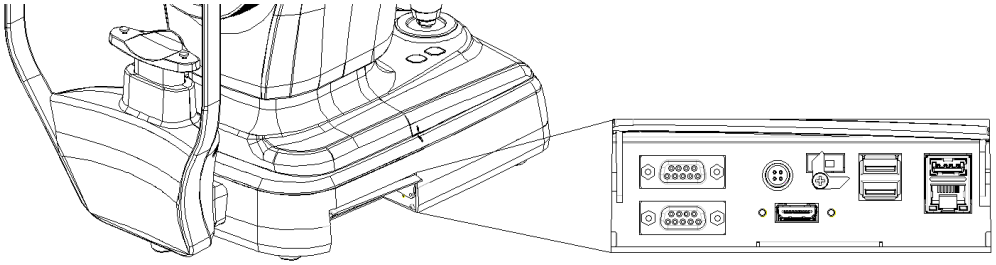

(4) After connecting the cable, make sure the wires are facing downwards so that the “external port cover” can be closed.

6. Check if the power switch on the bottom right of the instrument's base is turned OFF (the O part is pressed).
7. Connect the power cable to the power inlet, then connect the other side to an AC outlet.
   (The power cable is included in 8.1. Accessories)

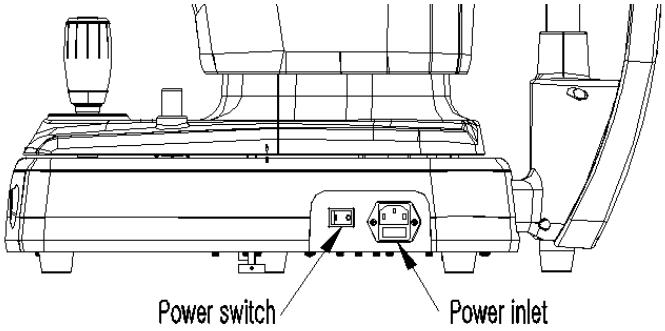

8. If any external devices are connected, turn them on first.
9. Press the I part of the power switch on the bottom right of the instrument's base to supply power.
10. Press the power button on the bottom front of the instrument's base to power the instrument's PC.

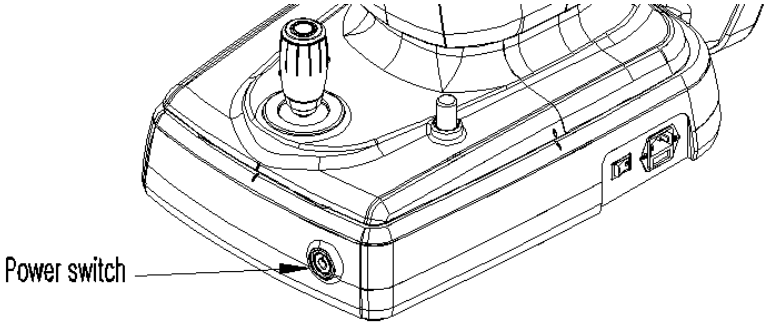

11. Check if any error occurs during the initialization process.
    Wait and do not touch anything until the initialization is completed.

12. Use the joystick and chin rest button on the body to check if there is any problem with the body's back-forth/left-right/up-down movements and the chin rest's up-down movement.

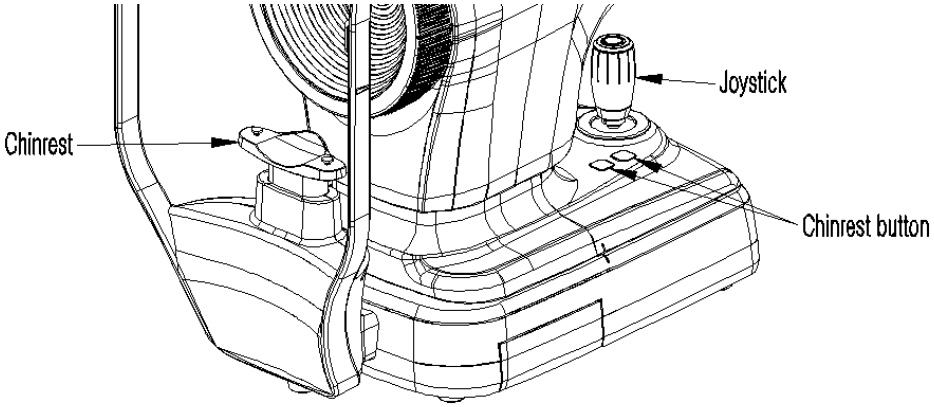

6

Operation

6.1. Software

1. Double-click the program icon on the Desktop.

2. Once the initialization process is finished, enter the user ID and password to log in.

3. Press the patient icon ( ) and fill in the patient's information. If the patient is already registered, skip this step.

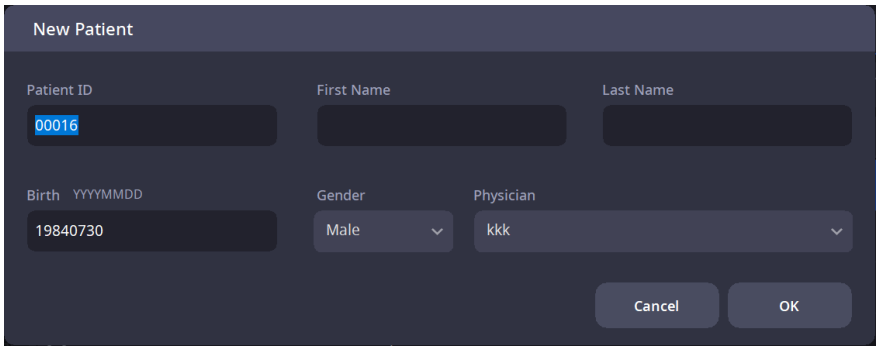

4. Check if the entered patient information is correct, then select a newly registered patient or an already registered patient from the list.

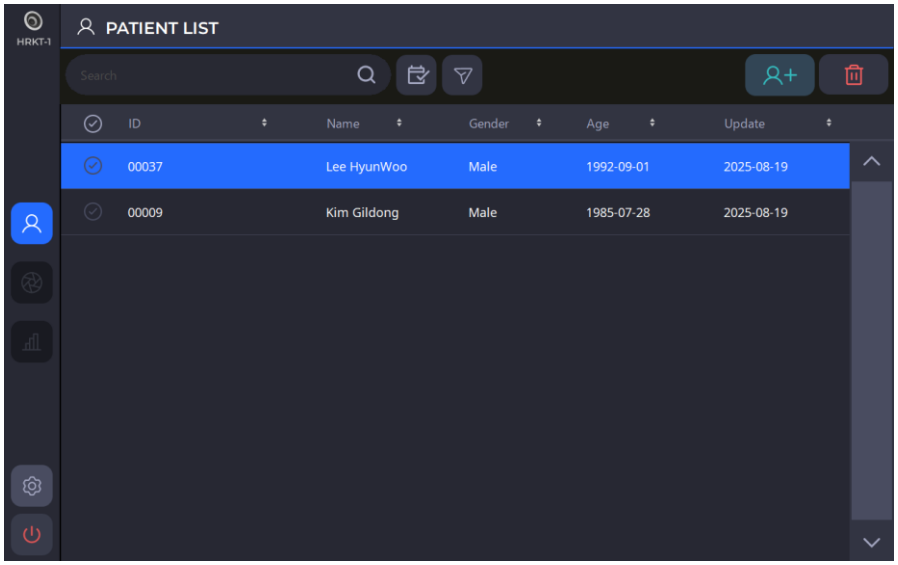

5. To send the patient information to a web viewer or delete it, select the left circle of a desired patient ID and click the TRANSFER ( ) button or the DELETE ( ) button.

6. Once you select a patient, the screen changes as shown below.

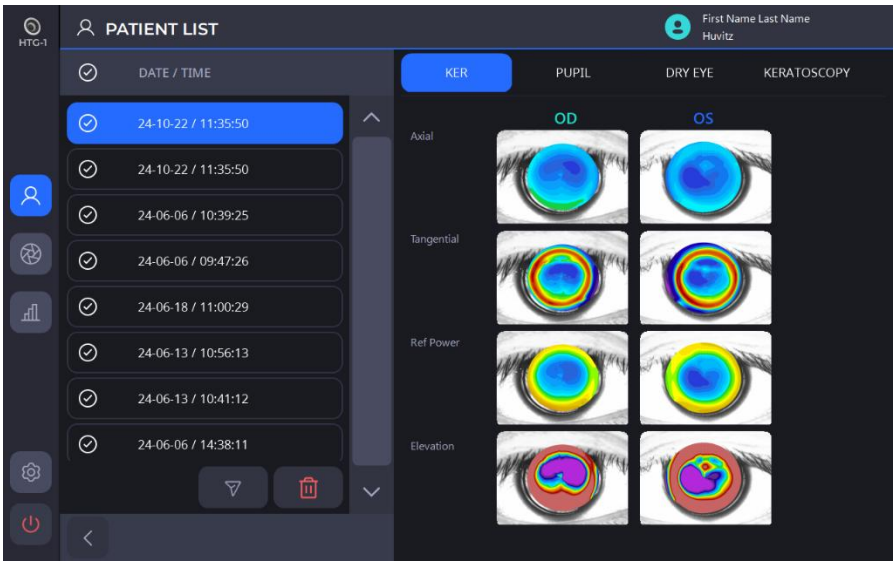

7. Click the Measure icon ( ) to enter the measurement mode.

6.2. SETUP Mode

[Select the section to setup]

- The setup consists of six sections: System, Patient, Measure, Connectivity, Report, Information. Select the desired section to setup displayed on the left.
- You can navigate through the different pages within the sections using the arrow icons [,]

[How to change the settings]

- Select the item you wish to change from the screen.
- If you press the OK button after changing the settings automatically, it saves any changes and exits the SETUP screen.
- If you press the CANCEL button, it exits the SETUP screen without saving the changes.

1. System Settings

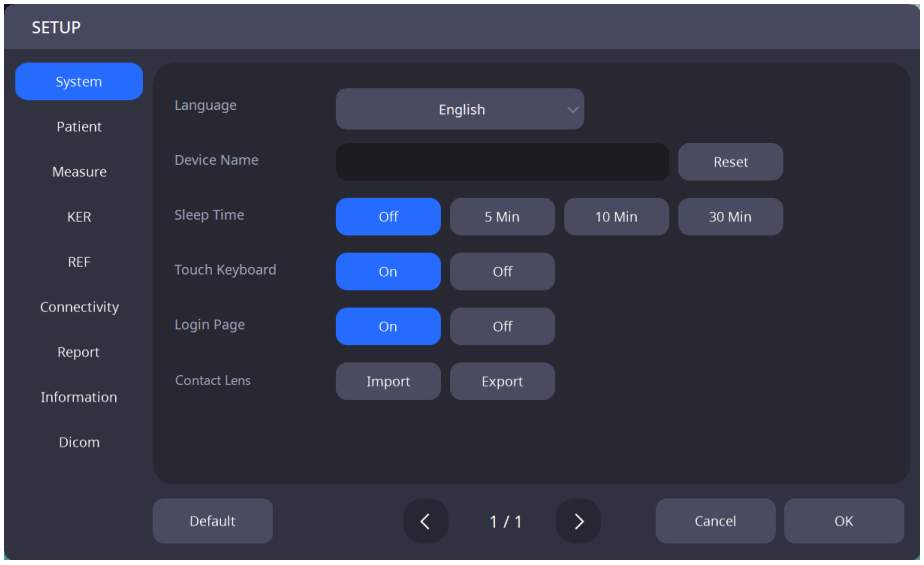

Language	Set the language.
Device Name	Set the device name.
Sleep Time	Set Sleep mode time.
Touch Keyboard	Set whether to turn ON/OFF the touch keyboard function for use.
Login Page	Set whether to turn the login page ON/OFF for use.
Contact Lens	Imports/exports contact lens data.

2. Patient Settings

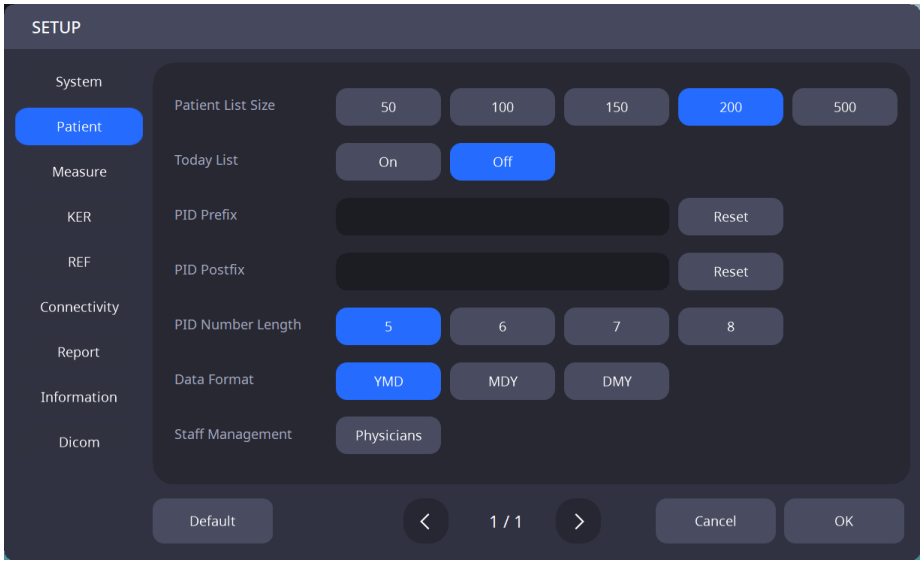

Patient List Size	Set the number of patients displayed on the patient list.
Today List	Set whether to turn the Today List (list of patients who visited today) ON/OFF for use.
PID Prefix	Set the prefix of a patient ID.
PID Postfix	Set the postfix of a patient ID.
PID Number Length	Set the length of a patient ID.
Date Format	Set the date format (year, month, day).
Staff Management	Register staff.

3. Measure Settings

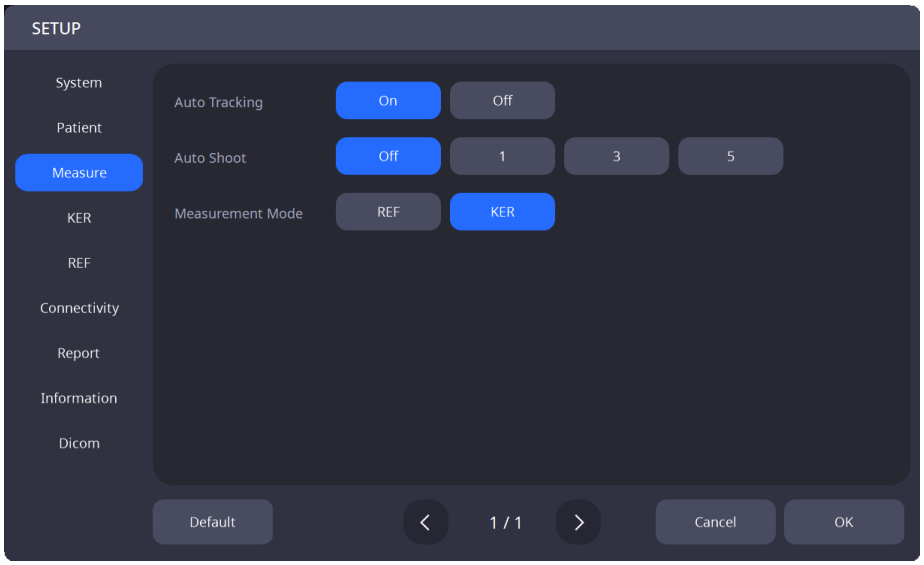

Auto Tracking	Set whether to turn ON/OFF the auto tracking function.
Auto Shoot	Set whether to turn ON/OFF the auto measurement function.
Measurement Mode	Select the initial measurement mode (REF / KER / REF&KER)

4. KER Settings

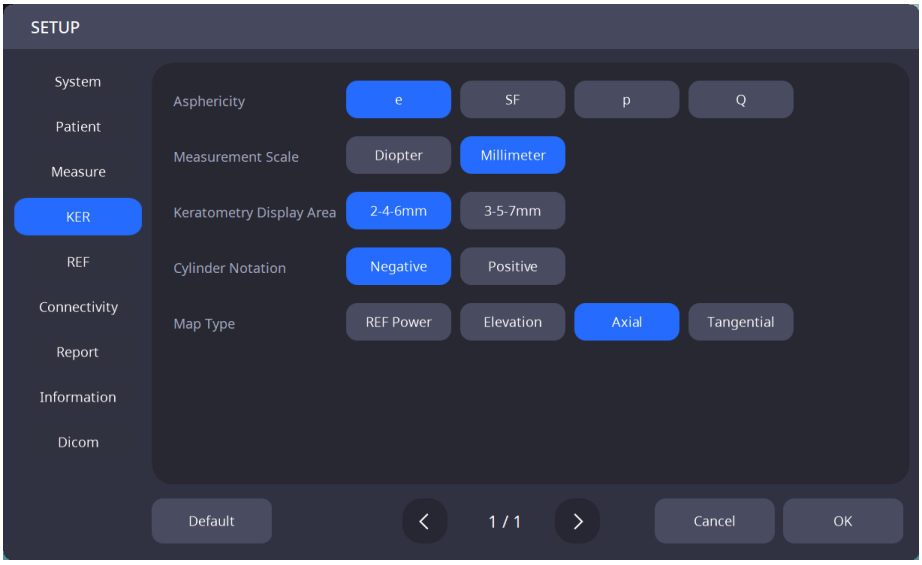

Asphericity	e / SF / p / Q
Measurement Scale	Set the default units of measurement (Diopter / Millimeters)
Keratometry Display Area	3-5-7 mm / 2-4-6 mm
Cylinder Notation	Positive / Negative
Map Type	Select the basic map (Axial / Tangential / Refractive Power / Elevation)

5. REF Settings

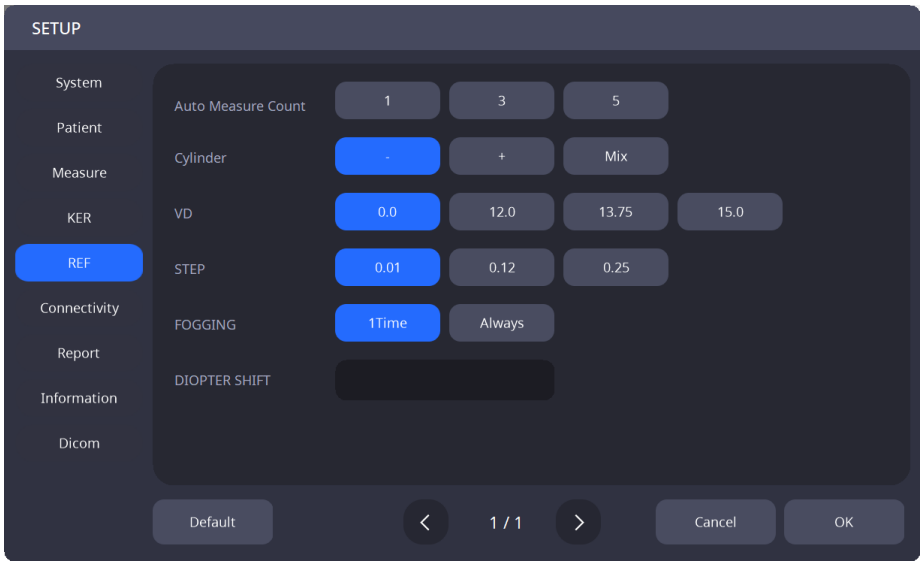

Auto Measure Count	1 / 3 / 5
Cylinder	Astigmatism display format (- / + / Mix)
VD	Distance between the corneal vertex and the corrective lens (0.0 / 12.0 / 13.75 / 15.0)
STEP	Units of display for spherical power and astigmatic power (0.01 / 0.12 / 0.25)
FOGGING	Number of fog trials during continuous measurement (1Time / Always)
DIOPTER SHIFT	Value when you want to correct the diopter measurement value (-5.00 ~ +5.00)

6. Connectivity Settings

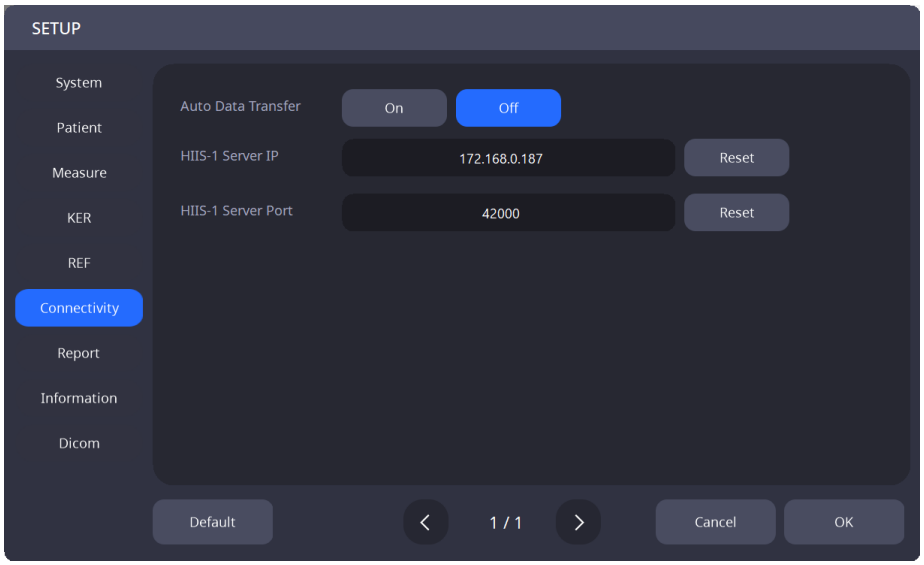

Auto Data Transfer	Set whether to turn ON/OFF the function that automatically sends the measured data to the web viewer upon saving
Web Viewer Server IP	Set the web viewer server IP address.
Web Viewer Sever Port	Set the web viewer server port.

7. Report Settings

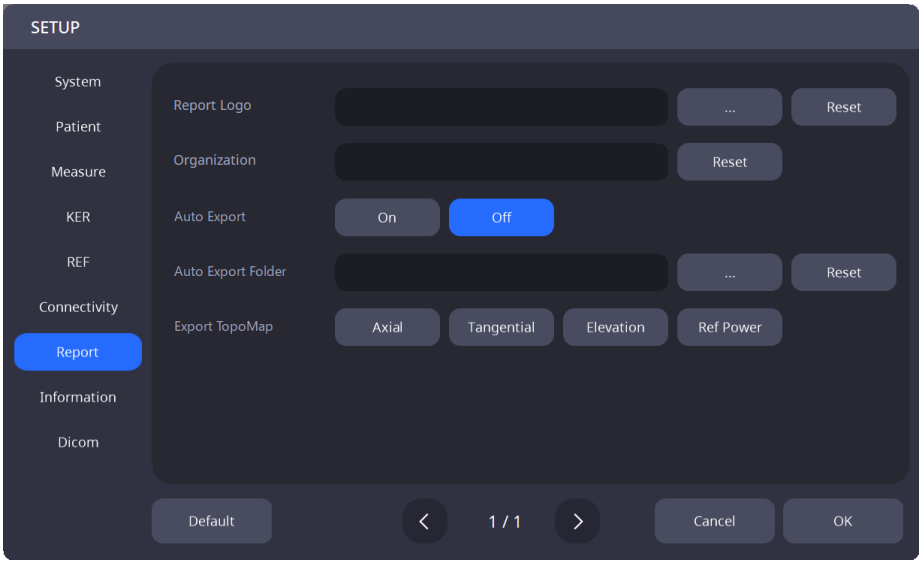

Report Logo	Set the report logo image.
Organization	Assign the name of the organization that uses the system.
Auto Export	Set whether to turn ON/OFF the function that automatically creates a report file for the measured data upon saving for use.
Auto Export Folder	Set the path to automatically create a report file for the measured data upon saving.
Export Topo Map	Set the topo-map to be used for the report.

8. Information Settings

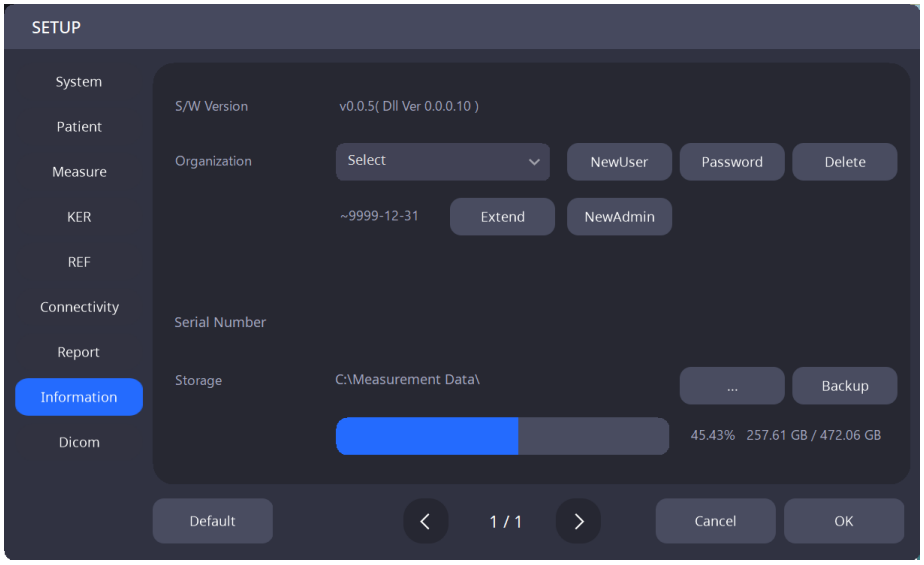

S/W Version	S/W Version Information
Organization	Manage the user accounts (add account / change password / delete account / administrator account / set account expiration date)
Serial Number	Serial Number Information
Storage	Change data storage path and backup settings

6.3. DICOM SETUP Mode

1. Worklist Settings

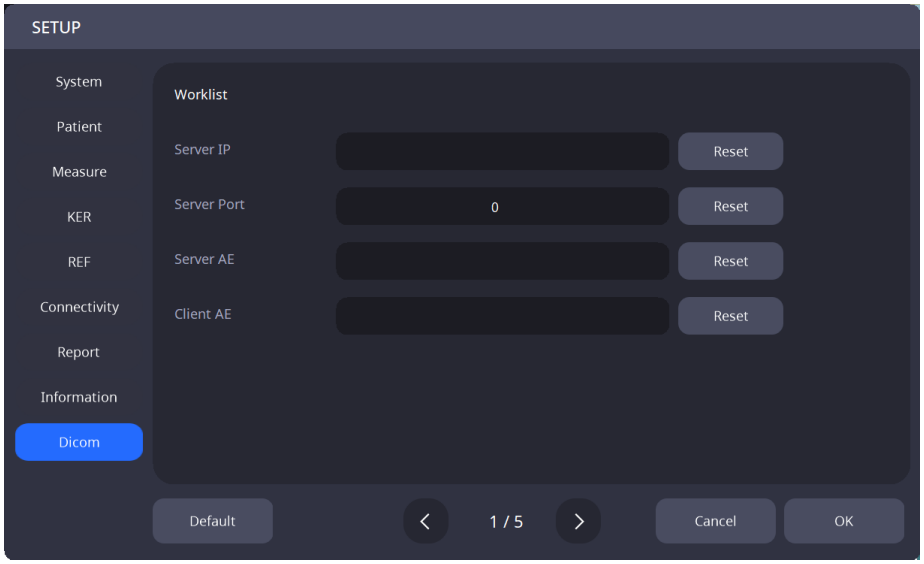

Server IP	Set the IP address of the PC where the server program is installed.
Server Port	Set the server port number.
Server AE	Set the server AE.
Client AE	Set the client AE.

2. MPPS Settings

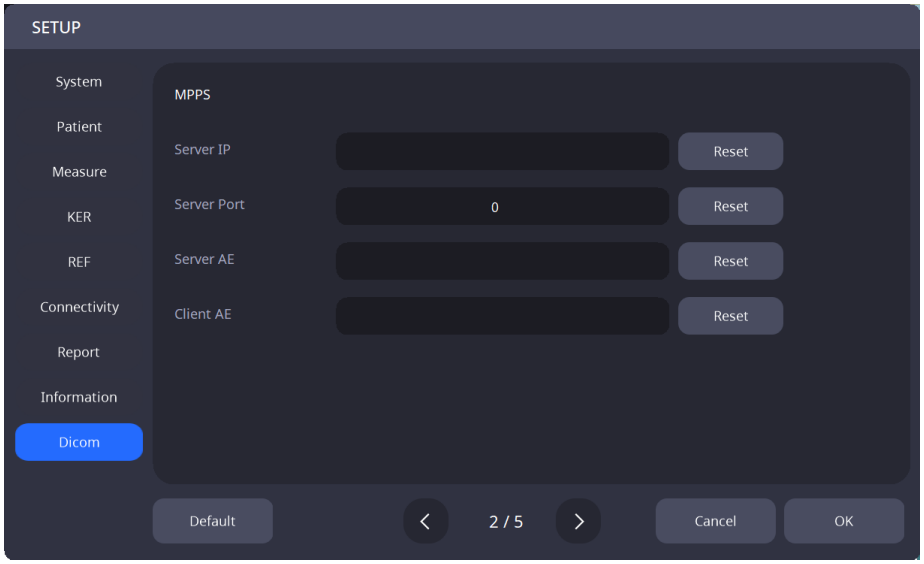

Server IP	Set the IP address of the PC where the server program is installed.
Server Port	Set the server port number.
Server AE	Set the server AE.
Client AE	Set the client AE.

3. Storage Settings

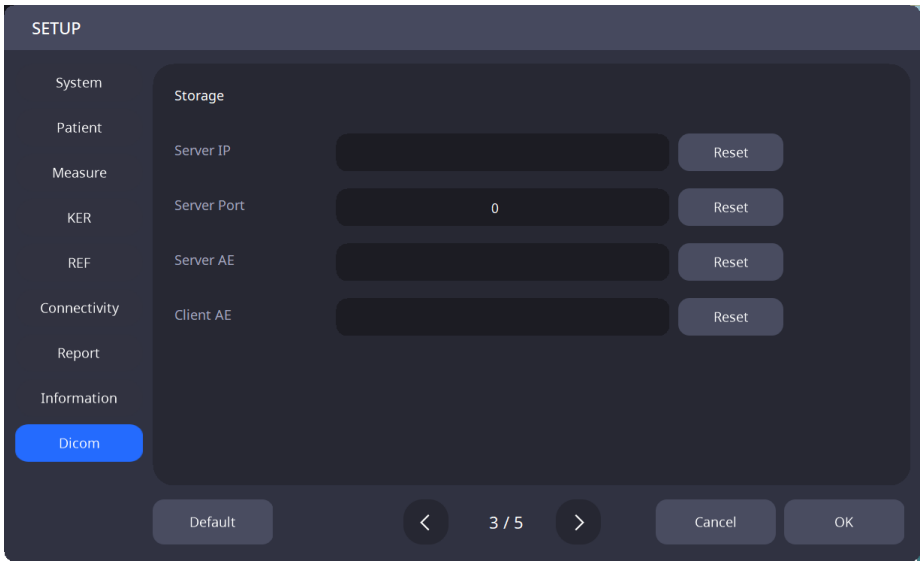

Server IP	Set the IP address of the PC where the server program is installed.
Server Port	Set the server port number.
Server AE	Set the server AE.
Client AE	Set the client AE.

4. General Settings

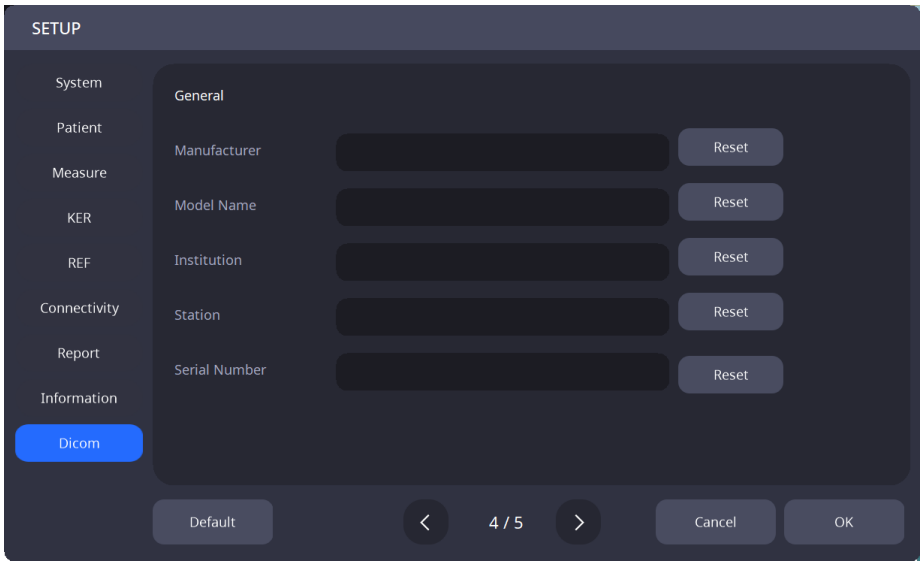

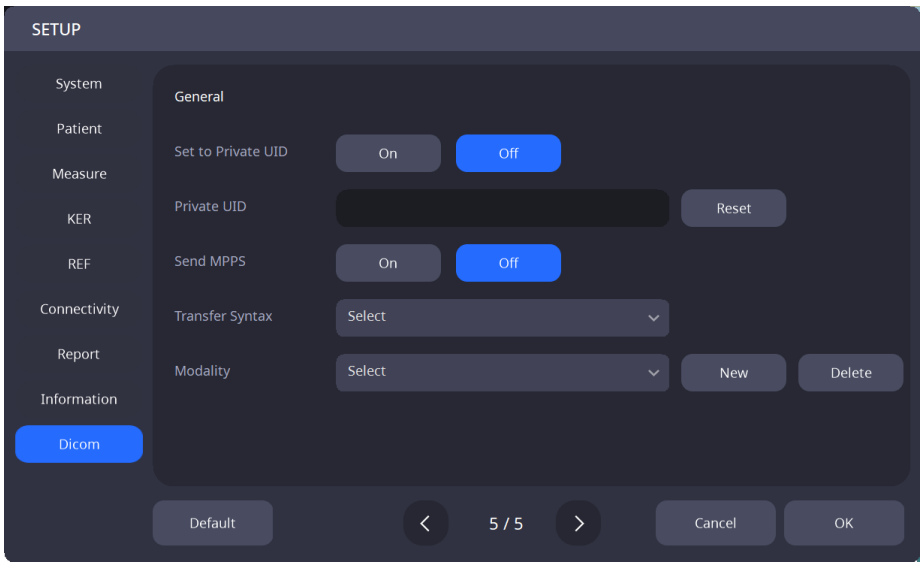

Manufacturer	Set the name of the manufacturer.
Model Name	Set the model name.
Institution	Set the name of the institution.
Station	Set the name of the station.
Serial Number	Set the product's serial number.
Transfer Syntax	Set the transfer syntax.
Set to Private UID	Set whether to turn ON/OFF the Private UID.
Private UID	Set the private UID.
Send MPPS	Set whether to turn ON/OFF the MPPS send function.
Modality	Set the modality.

6.4. Device Inspection

1. Measurement using Model Eye

(1) Remove the fixing pins from the chin rest, then remove the chin rest paper.

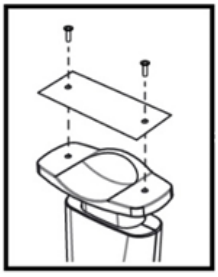

(2) Mount the model eye illustrated below and fix it using the two fixing pins.

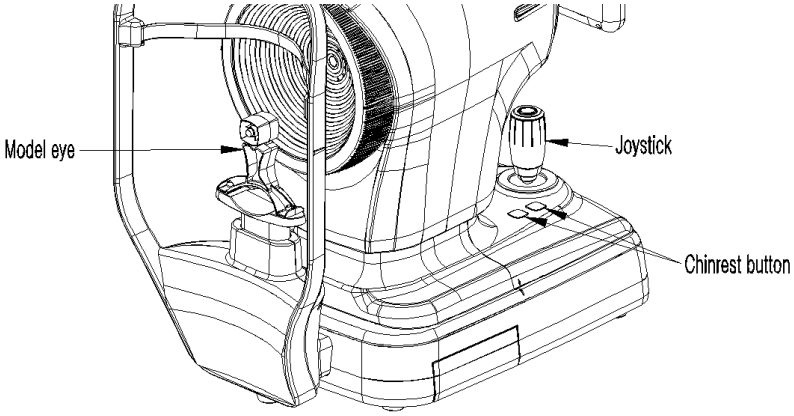

(3) Using the chin rest button and joystick to align the center of the model eye lens with the center of the Placido ring.

(4) Once you finish adjusting the focus, press the joystick button.

6.5. General Operation

1. Wipe the headrest and chin rest using a clean cotton swab or gauze, which is where a patient's forehead and chin comes into direct contact with the instrument.
   When using the chin rest paper, remove one sheet from the top after every patient.

2. Use the joystick to align the left-right index mark (A) and the front-back index mark (B) on the body and base.

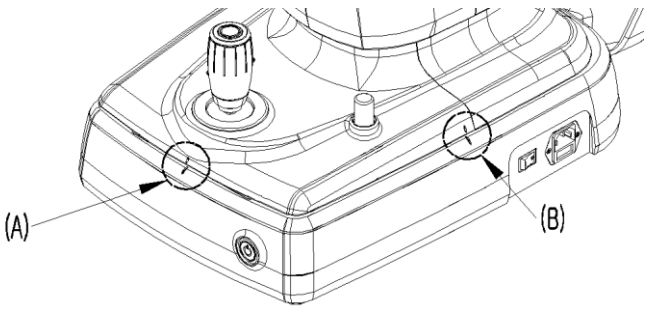

3. Instruct the patient to sit in front of the instrument.

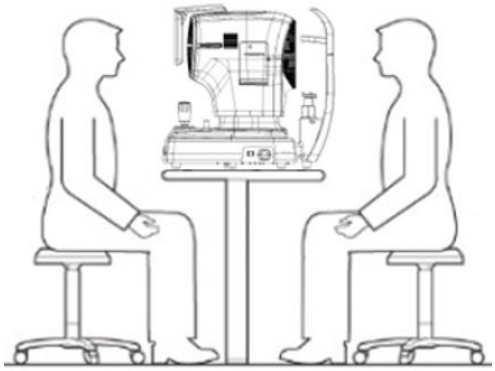

4. Set the measurement mode.

   Select one of the options displayed at the bottom of the screen: Kerato, Pupil, Dry Eye or Keratoscopy.

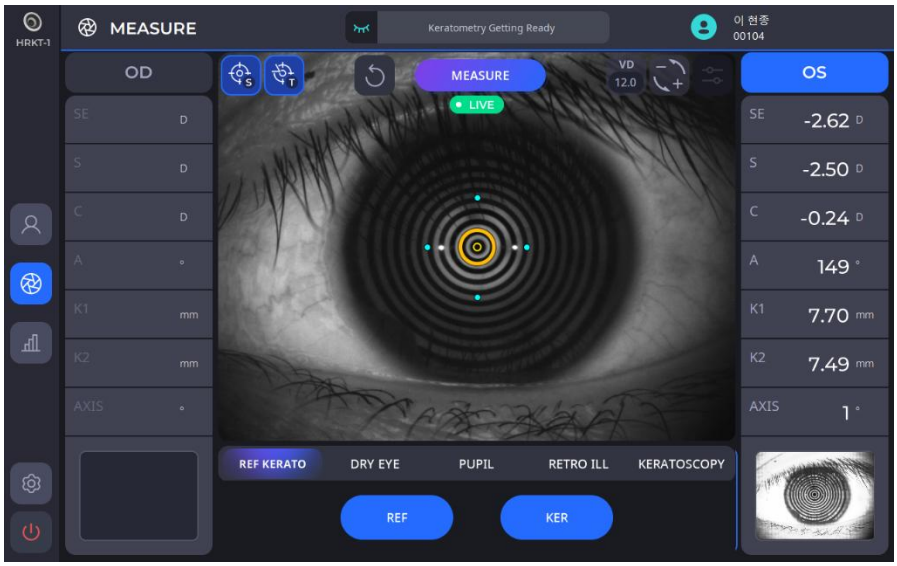

KERATO	Activate the Keratometer mode
DRY EYE	Activate the Dry Eye mode
PUPIL	Activate the Pupillometry mode
RETRO ILL	Activate the Retro-illum mode
KERATOSCOPY	Activate the Keratoscopy Mode

- In REF Keratometry mode, the Keratometry image is taken by pressing the button on the joystick, and the topography map and kerato value is calculated.
- In Pupillometry mode, the pupil image is taken by pressing the button on the joystick, and the pupil image and data is calculated.
- In Dry Eye mode, according to the selection of the desired mode (Lipid Layer, Tear Meniscus Height, NIBUT, Meibography, Blink).
- In Keratoscopy mode, either an image or video can be recorded for analysis and also supports Fluorescein screening

5. Select and set various functions from the left side of the screen.

(1) Set the Auto Shooting function.

	Indicates that the Auto Shooting function is ON.
	Indicates that the Auto Shooting function is OFF.

- If the Auto Shooting function is turned ON, the instrument automatically optimizes and takes the picture once the alignment and focus adjustment are completed.

(2) Set the Auto Tracking function.

	Indicates that the Auto Tracking function is ON.
	Indicates that the Auto Tracking function is OFF.

- If the Auto Tracking function is turned ON, the instrument automatically tracks the eye's center to align and adjust the focus when the patient's eye comes into the designated area.

6. Align the patient's eye to the eye-level mark on the headrest of the instrument.

(1) Instruct the patient to put their chin on the chin rest.
(2) Instruct the patient to press their forehead close against the headrest.
(3) Adjust the height using the chin rest button on the body to align the patient's eye level with the eye-level mark on the headrest.

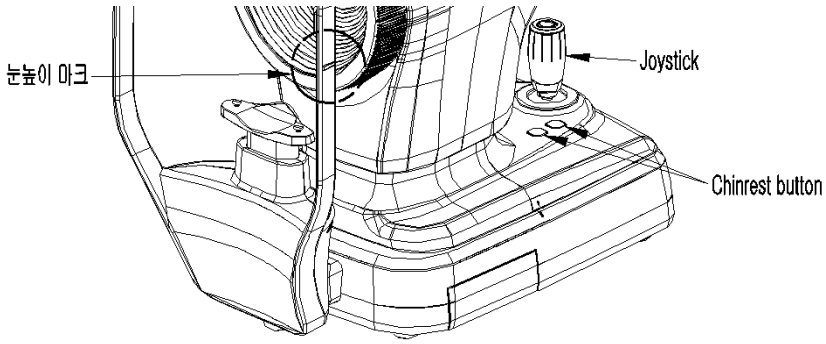

7. Instruct the patient to open their eyes wide and fix their gaze on the LED fixed inside.

8. Hold the joystick and adjust the body so that the patient's eye appears on the LCD screen.

9. Align and adjust the focus.

(1) Move the body up/down/left/right using the joystick until the center of the Placido ring (B) is aligned with the center of the cross (A). Once the two centers are aligned, check the focus indicator bar (C). Move the body back and forth using the joystick until the focus indicator bar (C) only shows yellow lines.

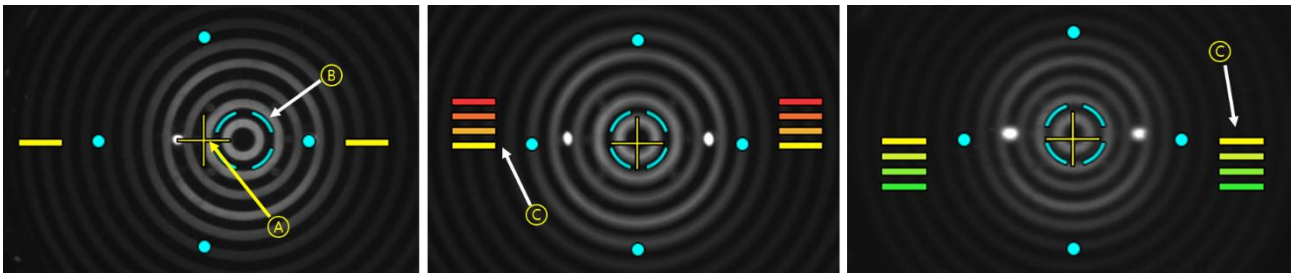

(2) Adjust the joystick up-down/left-right/back-forth to align it until the target mark (yellow concentric circle, A) appears.

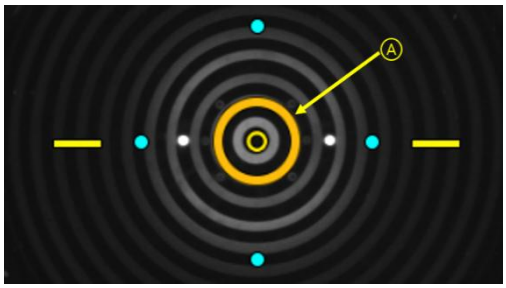

(3) If the Auto Tracking function is turned ON, the instrument automatically aligns and adjusts the focus within the designated range.

(4) If the body direction indicator (A) appears on the LCD screen during Auto Tracking, it means the moving range has reached its limit. In this case, hold the joystick and move the body towards the indicated direction.

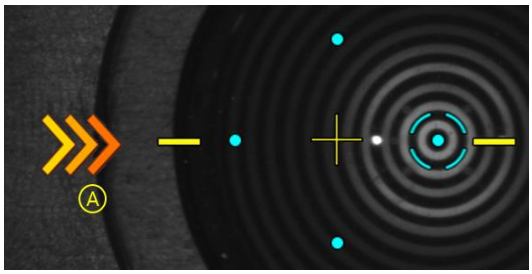

10. When in focus, press the joystick button to capture the image.

NOTE

The patient must keep their eyes wide open and not blink during the examination. Otherwise, the instrument cannot yield properly measured values.

NOTE

The automatic tracking function does not work at 3R and 38R, which are the boundaries of the corneal curvature radius measuring range. The measuring range boundary was measured manually using a model eye manufactured by HUVITZ.

NOTE

Measurement errors can occur under one of these conditions: out-of-focus, closed eyelid, tear film irregularity, high standard deviation in multiple measurements, movement, and measurement conducted outside of the range.

6.6. MAINTENANCE

6.6.1. After operation

1. Software exit and power off.

(1) On any screen, select the patient information icon ( ) in the upper left corner.

(2) On the screen below, select the Power Off icon ( ) in the bottom left corner.

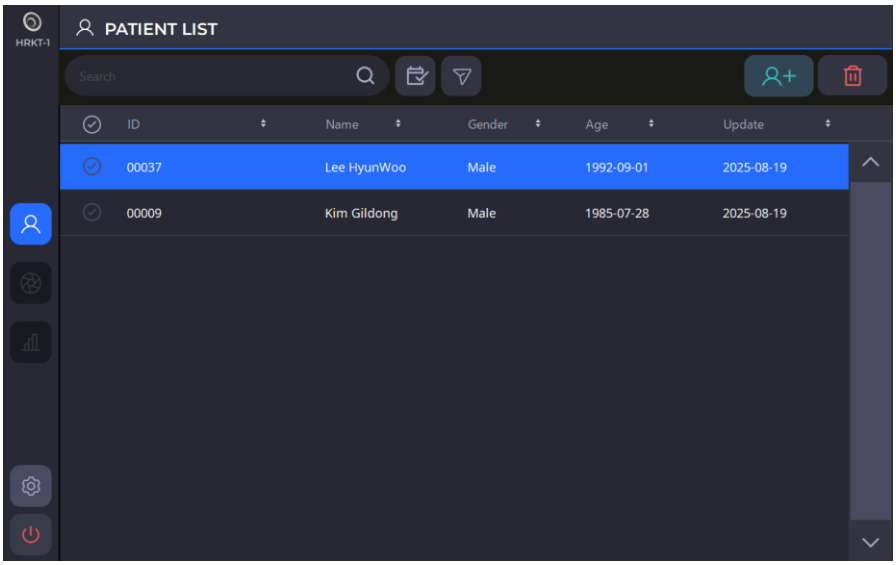

(3) When you select the Power Off icon ( ), a pop-up window appears as shown below.
Selecting the Packing mode option will move the chin rest and the body to the lowest position before powering off.

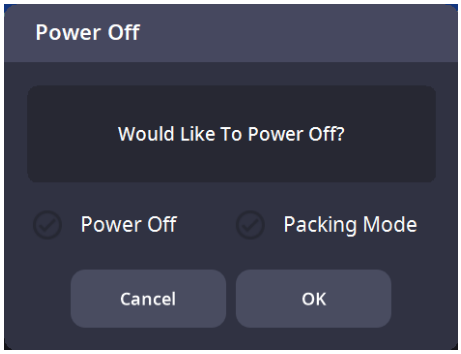

NOTE

When placing the instrument in the packaging box, you must power it off by selecting the Packing mode and press OK.

2. If the monitor and/or other accessories are still connected, power them off.

3. Press the power off button (O) on the base plate to switch off the instrument.

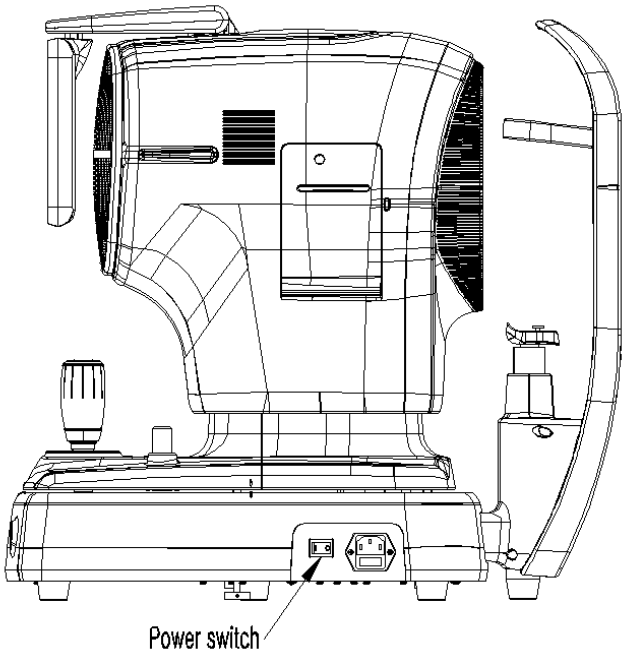

6.6.2. Cleaning and Instrument Protection

There is a risk of electric shock if the HRKT-1 device is not properly disconnected before cleaning the device. Therefore, ensure that the power plug is disconnected before cleaning the device.

1. Exterior
   (1) Ensure that the exterior is kept clean using a soft cloth. If the exterior has stains, wipe it with a soft cloth with neutral detergent diluted with water. When wiping the exterior, do not use volatile solutions, such as thinner or benzene.
   (2) Wipe the LCD monitor with a dry, soft cloth. Do not use a sponge or a wet cloth.
   (3) Do not press the LCD monitor with force or place a magnetic object near it.

2. Patient-contacted Areas
   (1) Wipe the headrest and chin rest clean where it makes a direct contact with patients, using clean gauze or cotton. If necessary, wet the cloth with rubbing alcohol and gently wipe the parts with it.
   (2) When the chin rest paper is in use, remove the used paper before examining the next patient.

3. Placido disk
   (1) The Placido disk dictates precision and is sensitive to pressure. The surfaces are susceptible to scratches.
   (2) Be very careful when cleaning the Placido’s disk's surface. Use a dry, lint-free cloth when cleaning it.
   (3) If necessary, gently wipe the surface with a cloth slightly dampened with water.
   (4) Make sure that no dust gets into the small holes.

4. Others
   (1) If the instrument will not be used for an extended period, store it with a dust cover.
   (2) Before sending the instrument to an agency or HUVITZ for maintenance, clean the headrest and chin rest with rubbing alcohol.

6.6.3. Replacement of consumables and fuse

1. Replacing chinrest paper
   (1) Pull out two fixing pins from chinrest.
   (2) Put a new chinrest paper on the chinrest.
   (3) Insert two fixing pins into the chinrest paper hole.
   (4) Attach the chinrest paper to the chinrest.

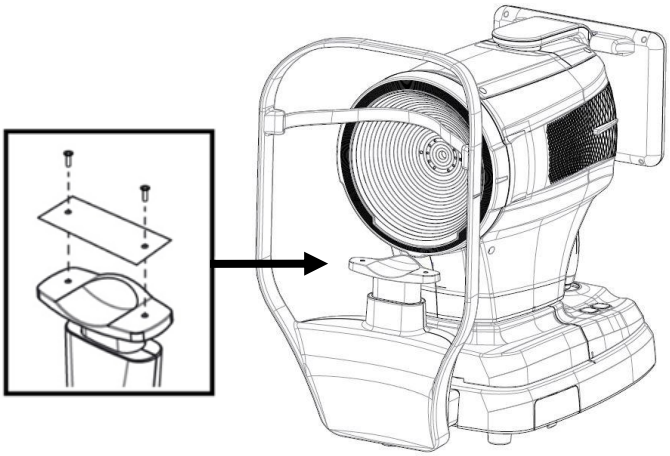

2. Replacing fuse
   (1) Ensure the power switch of device off (O).
   (2) Remove power cable from inlet.
   (3) Pull out fuse holder in the inlet with tweezers.
   (4) Replace two new fuses in the fuse holder. Be sure to check the fuse specification for the replacement (250V T 3.15AL).
   (5) Insert fuse holder into the inlet.

6.6.4. Printer paper

Replace the paper for the printer immediately when red line appears on the paper.

1) Open the cover by pressing on the button located next to the printer.
2) Cut the paper that is stuck in the printer and take out the paper roll to the outside.
3) Put in new paper roll into the printer case.
4) Fixate the paper by pushing it into the printer. At this time, adjust the length to a degree that can be discharged as the paper gets fit into the paper discharge hole of the cover.
5) Close the cover after fitting in the ends of the paper to the hole that lies in between the covers.

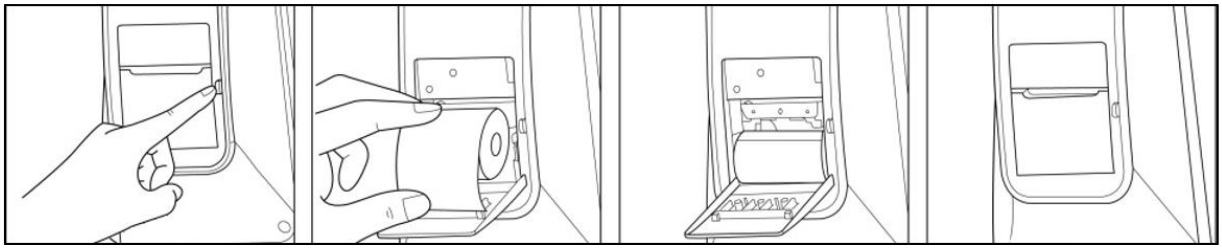

[Printer paper]

6.7. Send Data to Web-Viewer

1. Fill in Server IP and Server Port information.
(The Server IP refers to the local IP address, where HIS S/W program is installed. The Server Port is fixed to 8080.)

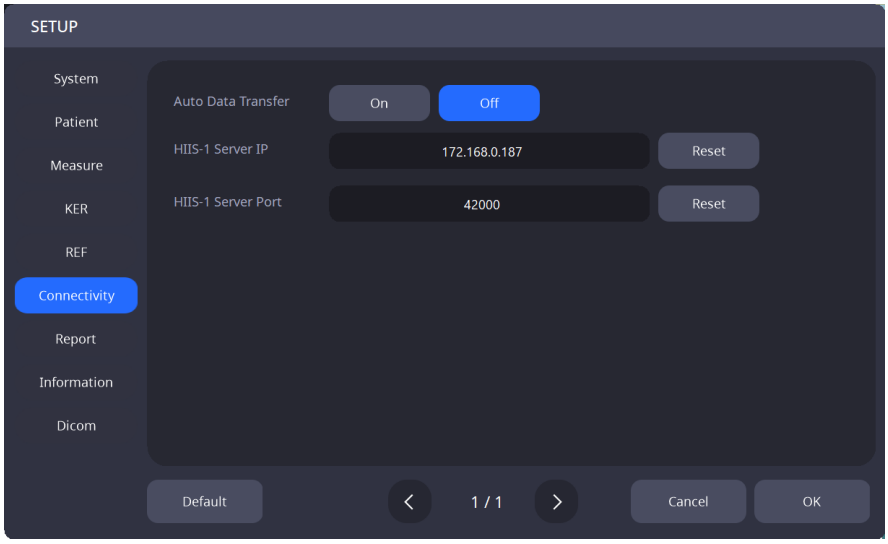

2. Select the patients from the Patients List to send their data to the web viewer. Then, click the 'TRANSFER' button to send all of the selected patient data.

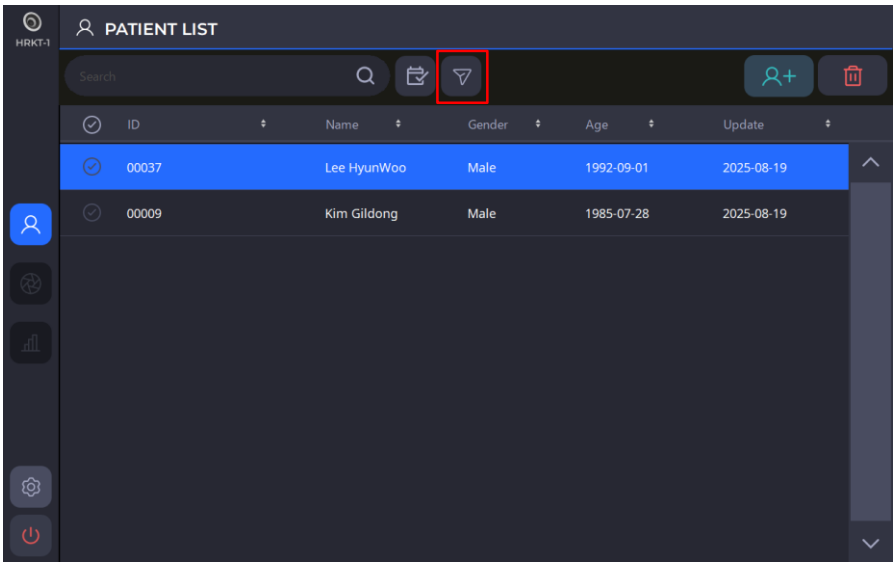

3. If only specific data need to be sent to the web viewer, select only those data from the data list.

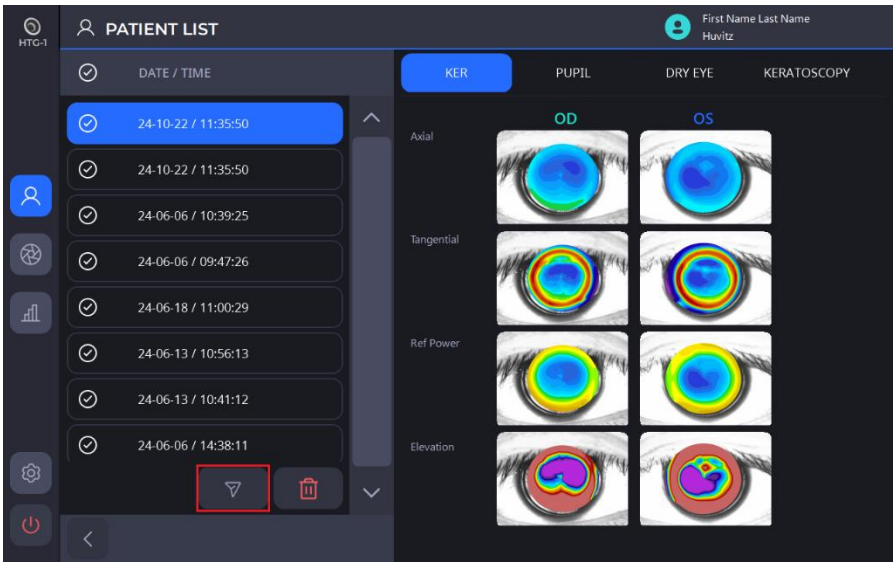

4. When the data transfer is successful, the following message box will appear on the screen.

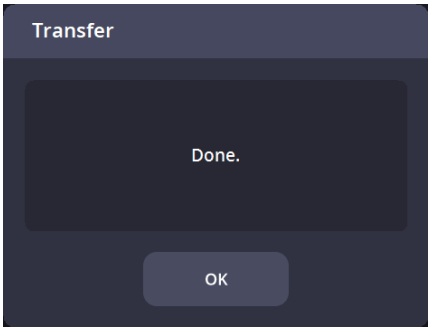

7

TROUBLESHOOTING GUIDE

If the device does not function properly, try the solutions listed in the table below before contacting the agency where you purchased the instrument.
If the device continues to malfunction after trying the solutions below, power it off and contact the agency.

Problems and Symptoms	Causes	Solutions
The screen does not turn on.	The power cable may not be connected.	Check the connection status of the power cable.
	The power switch may not be turned on.	Check if the power switch is turned on.
The screen does not turn on, even though the power is on.	The instrument may be in Sleep mode.	Touching the screen will restore the system from Sleep mode.
The screen suddenly turns off.		
The image cannot be captured.	The patient may not be looking at the fixed target at the time of the measurement.	Instruct the patient to focus on the fixed target.
The measurement data is not visible.	The patient's eyelid or eyelashes may have interfered with the image clarity.	Instruct the patient to open their eyes wide. If the patient cannot open their eyes wide, lift the patient's eyelid while being careful not to apply pressure against their eyes.

8

Specifications and Accessories

8.1. Standard Accessories

 Chin rest paper	 Touch pen	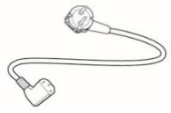 Power cable
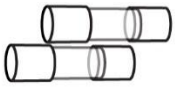 Spare Fuse (250V T 3.15A)	 Dust cover	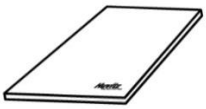 User manual
 Model eye	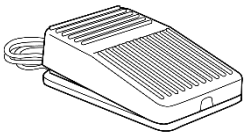 Foot switch	 Print Paper

8.2. Specifications

Refractometry		
Parameter	Measuring Range	Accuracy
Distance between vertex of corneal (VD)	0.0, 12.0, 13.75, 15.0	-
Spherical prescription (SHP)	0.0 to ±20.00D (in case of VD=12mm) (0.01/0.12/0.25D unit)	The accuracy is in accordance with ISO 10342.
Astigmatism prescription (CYL)	0.00 to ±12.00D (0.01/0.12/0.25D unit)	
Astigmatism axis angle (AX)	0˚ ~ 180˚ (1˚ unit)	
Astigmatism indication	-, +, MIX	-
Pupil distance (PD)	10 ~ 85mm	-
Minimum pupil diameter that can be measured	Φ2.5mm	-
Corneal Topography		
Working distance	80mm (Meibomian Gland: 100mm)	
Placido disc	24 rings	
Points Analyzed	Over 100,000	
Keratometry		
Parameter	Measuring Range	Accuracy
Corneal measurement range	Up to 9.8 mm (R = 8.0 mm, 42.2 D, n=1.3375)	-
Corneal curvature radius (Cornea refractive power)	5.00 to 13.00 mm (26 to 67.5 Diopter, n = 1.3375)	The accuracy and repeatablility are in accordance with Type A, ISO 19980
Direction of principal meridians	0° to 180°	±4° (principal meridional differences in radii of curvature ≤0,3 mm) ±2° (principal meridional differences in radii of curvature>0,3 mm)
White-to-white distance	7 to 14mm	± 0.05 mm
Pupil diameter	0.5 to 10mm	± 0.05 mm
Dry eye		
Dry Eye Function	Lipid Layer, Tear Meniscus Height, NIBUT, Meibomian Gland, Blink Analysis	
Common		
Horizontal Movement	55 mm (back and forth) / 100 mm (left and right)	
Vertical Movement	30 mm	
Chinrest Movement	62 mm (up and down), motorized	
Measurement method	Semi Auto Tracking	
Auto Movement Range	X, Z = ± 5mm / Y = ± 15mm (X,Y for positioning, Z for working distance)	
Auto Tracking Range	X, Y, Z = ± 5mm	
Power Supply	AC 100-240V, 50/60Hz, 1.0A - 0.5A	

Dimension	312(W)mm x 567(D)mm x 550(H)mm
Weight	23 kg

8.3. Drawings of System

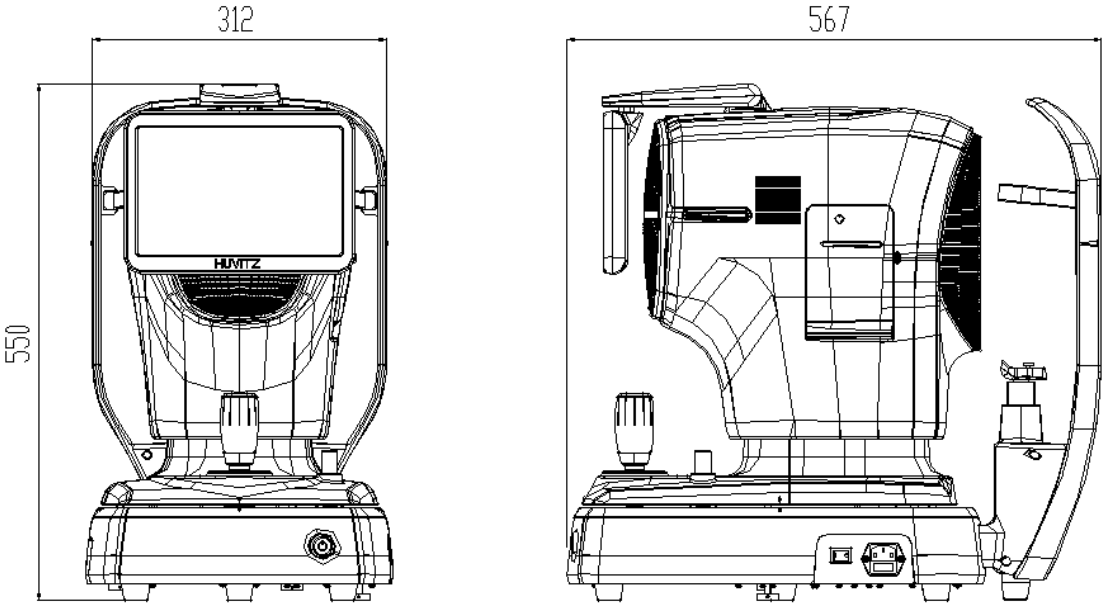

9

EMC INFORMATION

Manufacturer announcement – electromagnetic waves trouble

- **Electromagnetic waves trouble**

  HRKT-1 should be used in the below mentioned electromagnetic wave environment. HRKT-1 purchaser or user needs to confirm whether HRKT-1 is used in this type of environment.

Trouble test	Question of appropriateness
RF emissions CISPR 11	Group 1
RF emissions CISPR 11	Class B
Harmonic emissions IEC 61000-3-2	Class A
Voltage fluctuations/flicker IEC 61000-3-3	Complies

- **Electromagnetic waves tolerance**

  HRKT-1 is to be used in the below designated electromagnetic wave environment. HRKT-1 customer and user need to guarantee that the HRKT-1 will be used in this type of environment.

Tolerance test	IEC 60601 test level	Appropriateness level
Electrostatic discharge (ESD) IEC 61000 − 4 − 2	contact ±8 kV in the air ±15 kV	contact ±8 kV in the air ±15 kV
Electric rapid transients/bust IEC 61000 − 4 − 4	power supplying line ±2 kV input/output line ±1 kV	power supplying line ±2 kV input/output line ±1 kV
Surge IEC 61000 − 4 − 5	between lines ±1 kV between line and grounding ±2 kV	differential mode ±1 kV common mode ±2 kV
Voltage dip, instantaneous interruption, voltage fluctuation at the power input line IEC 61000 − 4 − 11	For 0.5 cycle < 5 %UT (UT's > 95 % decrease) For 5 cycle, 40 % UT (UT's 60 % decrease) For 25 cycle, 70 %UT (UT's 30 % decrease) For 5 seconds < 5 % UT (UT's > 95 % decrease)	For 0.5 cycle < 5 %UT (UT's > 95 % decrease) For 5 cycle, 40 % UT (UT's 60 % decrease) For 25 cycle, 70 %UT (UT's 30 % decrease) For 5 seconds, < 5 %UT (UT's > 95 % decrease)
Power frequency magnetic field (50/60 Hz) IEC 61000 − 4 − 8	30 A/m	30 A/m
Other UT is the A.C. power voltage for before approving the test level.		

- **Electromagnetic waves tolerance**

HRKT-1 is to be used in the below mentioned electromagnetic wave environment. HRKT-1 purchaser or user needs to confirm whether HRKT-1 is sued at this environment.

Tolerance test	IEC 60601 test conditions	Appropriateness level
Conductivity RF electromagnetic field IEC 61000－4－6	3 Vrms 150 kHz~80 MHz	3 Vrms
Radioactivity RF electromagnetic field tolerance IEC 61000－4－3	10 V/m 80 MHz~2.7 GHz scope	10 V/m

10

SERVICE INFORMATION

Repair: If the problem has not resolved despite following the Troubleshooting guide in Chapter 7, please contact Huvitz's agentalong with the following information:

1.1 Name of Equipment Type: Auto Ref-Topographer HRKT-1
1.2 Typical No. of Equipment: Typical number consisted of 8 digits and characters written on its name plate.
1.3 Explanation on its symptom: Description in detail.
1.4 Supply of parts required for repair:

* The preservation period of parts needed to repair this machine is seven (7) years after the product has been discontinued.

1.5 Parts to be repaired by qualified service manpower:

1.6 The following parts are consumable or may degrade in quality after extended use. Users should not attempt to replace them on their own. Please contact a Huvitz agent for replacement if these parts have been sufficiently consumed or have degraded due to prolonged use.

1.6.1 Back up battery for clock and data.

11

SOFTWARE LICENSE AGREEMENTS

⚠ CAUTION

The software including all the contents of files, disk or other media may be used only when you agree with the "SOFTWARE LICENSE AGREEMENT" below.
Before using the Software, thoroughly read "SOFTWARE LICENSE AGREEMENT"

Le logiciel, y compris tout le contenu des fichiers, du disque ou d'autres supports, ne peut être utilisé que si vous êtes d'accord avec le "SOFTWARE LICENSE AGREEMENT" ci-dessous.
Avant d'utiliser le logiciel, lisez attentivement "SOFTWARE LICENSE AGREEMENT"

SOFTWARE LICENSE AGREEMENT

This SOFTWARE LICENSE AGREEMENT (hereafter referred to as Agreement) is a legal contract between you (regardless of private users or corporate users) and HUVITZ CO., LTD. (hereafter referred to as HUVITZ).

By installing, copying, downloading or in any way starting to use the Software, you accept and agree to all the terms and conditions of this Agreement. If you don't agree with the terms and conditions of this Agreement, return the disc package and the instruction manual to the location where you obtained them.

1. GRANT OF LICENSE

HUVITZ grants to you a non-exclusive, non-transferable limited license to use the Software under the terms and conditions of this Agreement.

- You may use the Software in a single location on a hard disk of a computer
- "Use" of the Software means reading the Software to a temporary memory such as RAM of a computer, or installing the Software on a fixed memory such as a hard disk.
- When the Software is used on multiple computers, you must obtain the same number of the licenses as the number of computers where the Software will be used even if the Software will not be used concurrently on multiple computers.
- Installing the Software into a fixed memory such as a hard disk of a computer from the server doesn't mean, "Using" the Software as long as the network server runs only for installing the Software into another computer. In such cases, once another computer has the software installed from the server, that computer needs the license.

2. INTELLECTUAL PROPERTY OWNERSHIP

You acknowledge that the Software and the Documentation and all the duplications are the intellectual property of HUVITZ and that HUVITZ owns any and all source codes, copyrights, trademarks, patents, trade secrets, confidential information and any other proprietary rights of the Software and the Documentation. The Software and the Documentation are protected by copyright laws and international copyright treaties, as well as other intellectual property laws and treaties.

3. SOFTWARE VERSION

The Software and the Documentation may be updated or modified at HUVITZ's own discretion from time to time without any prior notice.

4. RESTRICTIONS

- You may not use any HUVITZ trademarks, trade names or logos without the prior written consent of HUVITZ.
- You may not copy, duplicate, divert, modify, distribute, reverse engineer, decompose, disassemble or otherwise attempt to discover the source code of the Software and the Documentation without the prior written consent of HUVITZ.
- You may not use any HUVITZ trademarks, trade names or logos without the prior written consent of HUVITZ.
- You may not license or sublicense the Software, or assign, transfer or convey in any manner the Software to any third person without the prior written consent of HUVITZ. Any attempt to grant the Software to any third person will terminate this Agreement and relieve all obligations which may be undertaken on HUVITZ, regardless of whether the Software is paid for or not.

5. WARRANTY

- You may receive a replacement when you find any physical damage to the CD-ROM or printed materials within 30 days from the receipt of the Software.
- Unless otherwise provided herein, the Software is being delivered to you on an “AS IS” basis. ALL EXPRESS OR IMPLIED CONDITIONS, REPRESENTATIONS AND WARRANTIES, INCLUDING BUT NOT LIMITED TO ANY IMPLIED WARRANTIES OF MERCHANTABILITY, FITNESS FOR A PARTICULAR PURPOSE OR NON-INFRINGEMENT OF THIRD PARTY RIGHTS ARE DISCLAIMED. HUVITZ WILL NOT WARRANT THAT THE OPERATION OF THE SOFTWARE IS UNINTERRUPTED, OR ERROR-FREE.

6. LIMITATION OF LIABILITY

IN NO EVENT WILL HUVITZ BE LIABLE TO YOU FOR ANY DAMAGES, LOSS, CLAIMS OR COSTS WHATSOEVER INCLUDING BUT NOT LIMITED TO ANY INCIDENTAL, INDIRECT, CONSEQUENTIAL OR SPECIAL DAMAGES, OR ANY LOST REVENUES, PROFITS, DATA OR INFORMATION, ARISING OUT OF OR RELATED TO THE USE OF OR INABILITY TO USE SOFTWARE, EVEN IF HUVITZ IS NOTIFIED OF THE POSSIBILITY OF SUCH DAMAGES, LOSS, CLAIMS OR COSTS.

7. FORCE MAJEURE

In no event HUVITZ will be liable to you for any delay or failure in the performance of its obligations under this Agreement if and to the extent such delay or failure in performance arise from any cause or causes beyond the reasonable control of HUVITZ, including, but not limited to, fire, explosion, flood, earthquake, war, rebellion or riots.

8. INDEMNIFICATION

You agree to defend, indemnify and hold harmless HUVITZ, its affiliates and their directors, employees and agents from any damages, loss, liabilities or expenses (including attorneys fee) resulting from, or incurred in connection with or based upon (a) your breach or non-compliance of this Agreement or (b) installation or other operations to set up the Software by persons other than HUVITZ personnel or those specified by HUVITZ.

9. TERM AND TERMINATION

This Agreement will commence when you open this package or start the use of the Software and continue in effect until terminated by either party. You may terminate this Agreement at any time for convenience and HUVITZ may terminate this Agreement at any time for convenience. This Agreement will be immediately terminated if you fail to comply with any term or condition in this Agreement. Your payment will not be refunded in any event of termination. When this Agreement is terminated, you will cease your use of Software, and destroy and erase all the Software and Documentation. Section *4, 5, 6,* 7, 8, 13 and 14 will be unaffected and survive the termination of this Agreement.

10. NO ASSIGNMENT

This Agreement or any part of this Agreement may not be assigned or transferred by you without the prior written consent of HUVITZ. Any assignment or transfer without such consent will be null and void.

11. NO THIRD PARTY RIGHTS

This Agreement is intended to be solely for the benefit of the parties and is not intended to confer any benefits upon or create any rights in favor of, any person other than the parties in this Agreement.

12. EXPORT REGULATIONS

Software is subject to Japanese export security laws and regulations and may be subject to export laws and regulations in other countries. You agree to comply strictly with such export laws and regulations.

13. SEVER ABILITY

If any Section in this Agreement is found to be void or unenforceable by applicable law, such Section will be deleted automatically and the remaining Sections of this Agreement will remain in full force and effect.

14. NO WAIVER

The delay, omission or failure of HUVITZ to enforce any right or remedy in this Agreement will not be construed to be a waiver of such right or remedy of HUVITZ.

15. ENTIRE AGREEMENT

This Agreement constitutes the entire agreement between the parties and supersedes any prior written or oral agreement between the parties concerning the Software.